WINEGARD®

Movin' View™

Digital Satellite Mobile Antenna for Two Receivers for Use While Stationary
Models MV3500A (White Dome)
MV3535A (Black Dome)
MVA-35W (White Dome, OEM)
MVA-35B (Black Dome, OEM)

Made in the U.S.A. U.S. Patent Nos. 6,023,247; 6,188,300

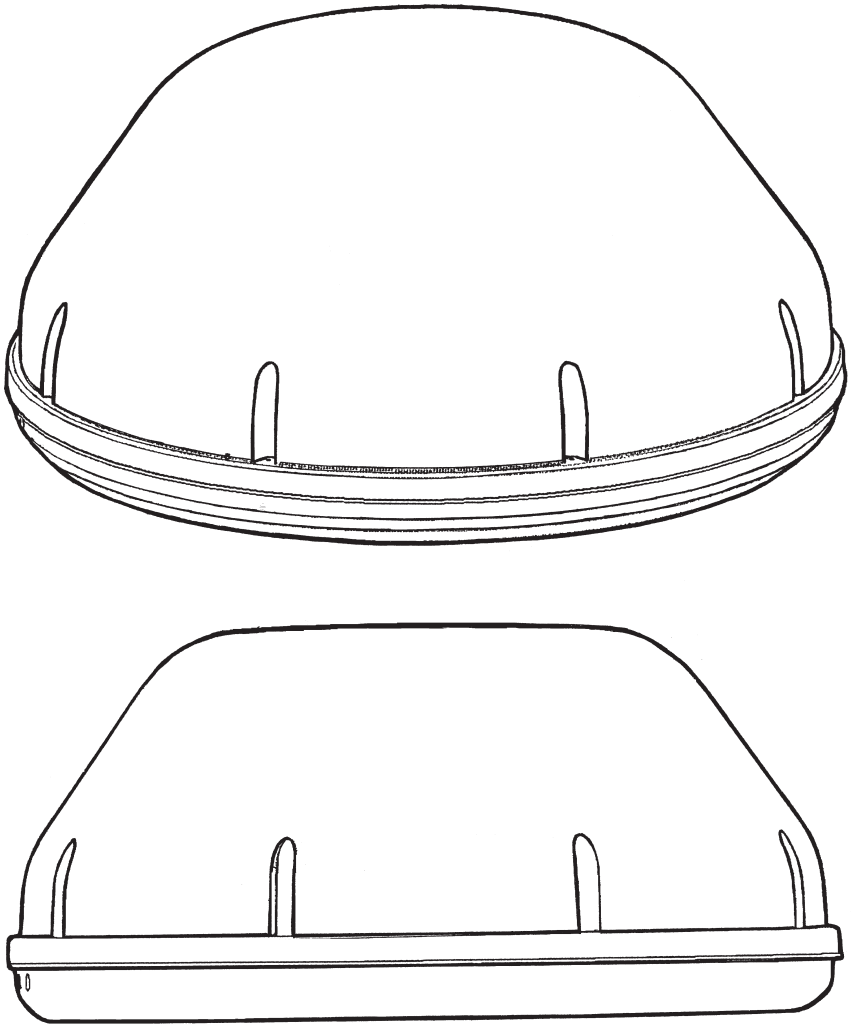

Winegard Company • 3000 Kirkwood St. • Burlington, IA 52601-2000
319/754-0600 • FAX 319/754-0787 • www.winegard.com
Printed in U.S.A. © Winegard Company 2005 2452063 Rev. 12/19/05

Introduction/How Does Digital Satellite TV Work?

About this manual —We hope this manual will provide clear instructions to install and operate MV3500A. Two symbols have been used —

Indicates caution should be taken!

Indicates suggestions to make processes easier for you.

Introduction

Congratulations! You have purchased one of Winegard's latest developments in the mobile satellite reception product line —the Movin' View™. This system, used with your digital satellite receiver, will deliver the best reception possible.

How Does Digital Satellite TV Work?

Satellite programming originates from an "uplink" facility on Earth — the facility receives many signals from different sources, combines the signals digitally and transmits to the satellites. The satellites (22,300 miles above Earth) receive the uplink signal, amplify it and then transmit it back to earth in the Ku frequency band. This signal is concentrated and reflected to the LNBF* located at the "focal point" of the dish. The LNBF amplifies and converts the signal to the 950 to 1450 MHz range. The signal is then passed through a coaxial cable to the receiver where individual channel selection and processing take place.

* Low Noise Block Converter Feed

For Programming information call:
DISH NETWORK® - 1-800-333-DISH (1-800-333-3474)
DIRECTV® - 1-800-DIRECTV (1-800-347-3288)
EXPRESSVU® - 1-888-SKYDISH (1-888-759-3474)

Your new Winegard RV Digital Satellite System is an easy-to-use satellite TV reception system. Because it mounts on the top of your recreational vehicle, it goes where you go and provides quality reception of digital satellite signals. Check with your program provider for exact coverage area.

MV3500A features:

- Easy "one-button" operation
- Compatible with most digital satellite receivers
- Ability to toggle between satellites using remote control, if subscribing to multisatellite programming
- Winegard warranty

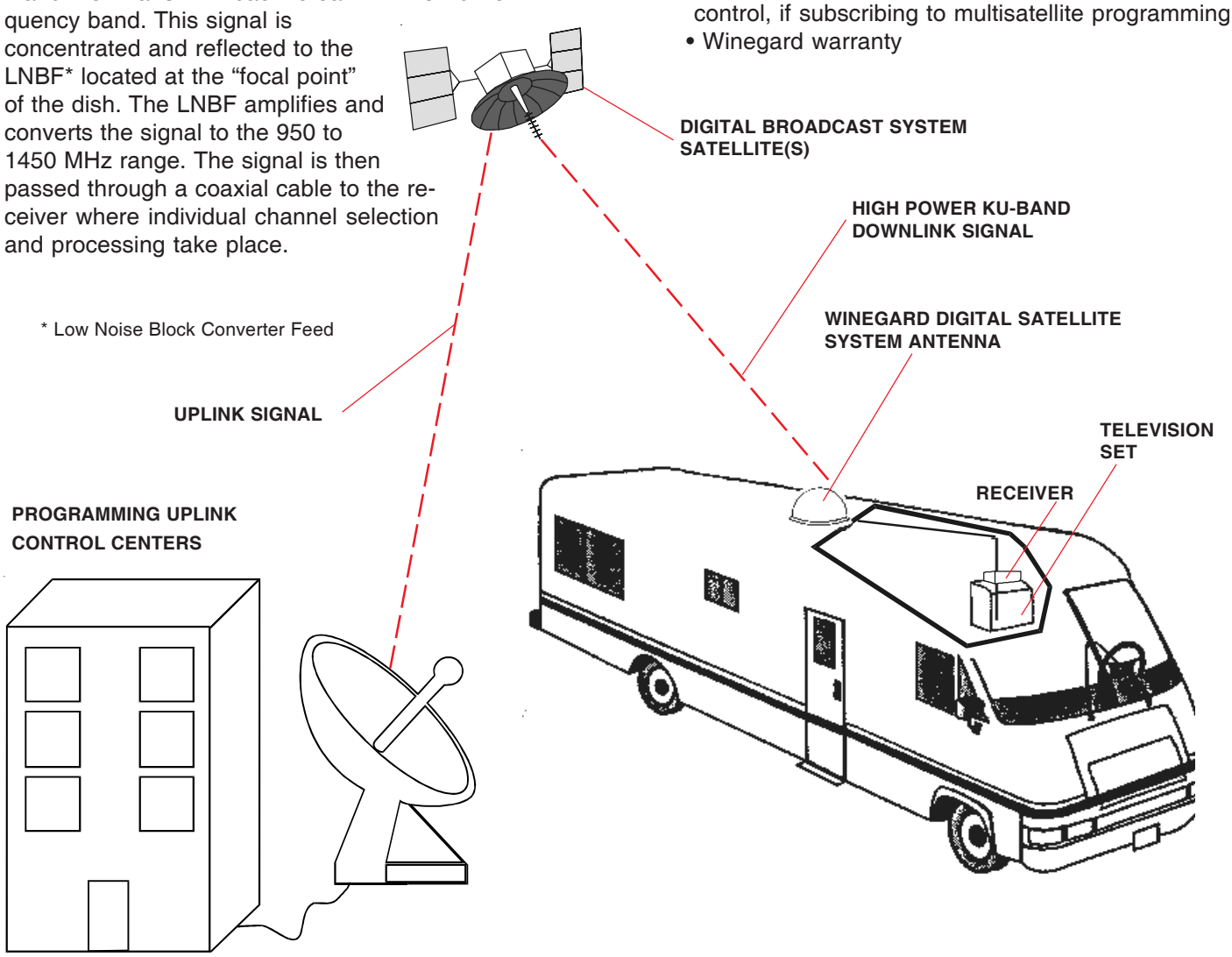

DIRECTV® is an official trademark of DIRECTV, a unit of GM Hughes Electronics Corporation.
DISH Network™ is an official trademark of EchoStar Communications Corporaton.

Quick Reference Guide

NOTICE!

This model is PRESET for DIRECTV® receivers.

If you have a DISH Network® or ExpressVu® (Canada) receiver, you must change the numbered switches inside the dome.

TO CHANGE SWITCHES INSIDE DOME —

1. Remove screws holding dome to base and remove dome. Place dome in safe spot to avoid damage. Switches will be set at **101°** for **DIRECTV®**. You may be changing these switches.

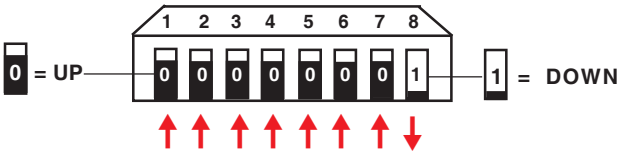

(#1 represents Switch DOWN; #0 represents Switch up)

Sat. Rcvr. Mt. Option	Switch Set Position 1	2	3	4	5	6	7	8
DIRECTV (FACTORY PRESET)	0	0	0	0	0	0	0	1
DISH NETWORK	0	0	0	1	0	0	1	1
ExpressVu	0	1	0	1	1	0	1	1

0= UP 1= DOWN

SWITCH SETTINGS SHOWN BELOW

2. Determine which programming you will be using. This will determine how you set your switches.

For **DISH Network** set switches to **119°**.

For **ExpressVu®**, set switches to **091°**.

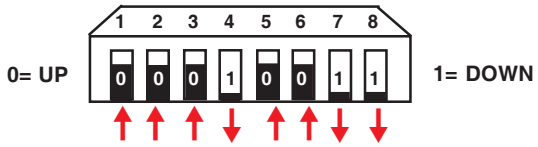

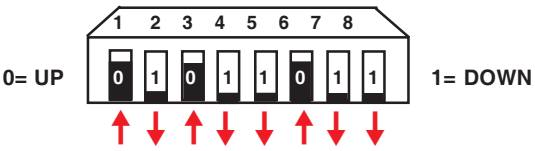

MOUNTING

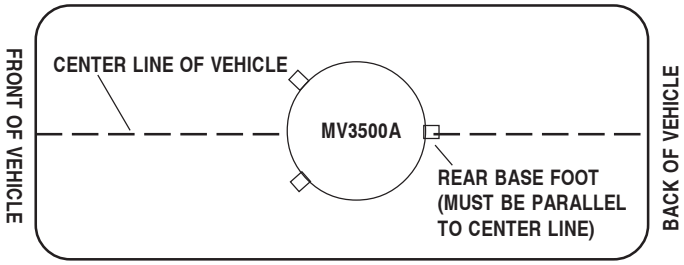

OPERATION (VEHICLE MUST BE STATIONARY!!)

1. Turn on receiver and television set. **The MV3500A must be connected to a receiver that is plugged into 120 VAC.**

2. Verify that you are getting the receiver's menu screens on the television. These screens are available with or without the dish finding the signal.

3. Turn the power switch on for the MV3500A. The dish will detect if it is already on a satellite signal. If it detects a signal, the dish will move to check its alternate satellite and then move back to the original satellite signal that it was on.

4. If no signal was detected, the dish will begin its search to locate the primary satellite. Once the dish locates a signal, it will pause long enough to identify which satellite it has located. This may or may not be visible on your receiver's point dish screen.

5. After the unit has verified that it has the correct satellite, it will move to check the alternate satellite and move back to the primary satellite to complete the search routine.

6. If you do not have signal, see *Troubleshooting,* p.11.

NOTE: Because the MV3500A uses information from the last location that it was on a signal, satellite acquisition may take longer if the dish is inactive over long distance traveling.

DirecTV must be set to the "two" satellite, oval dish setting. Refer to your receiver manual.

DISH Network receivers must have the check switch set for "SW42". See page 4.

To toggle between satellites when subscribing to multi-satellite programming—

The MV3500A will toggle between the primary and seconday satellites for either DISH Network or DIRECTV. Both have programming on more than one satelite. When a channel is selected on the remote control and is not on the satellite currently selected, the unit will automatically toggle to the correct satellite.

DIRECTV programming

1. DIRECTV receivers must be set for oval dish 2 sat selection to enable toggling between primary 101°W satellite and alternate 119°W satellite only. (Consult receiver manual for procedure.) After receiver is set for the correct dish selection, when you request a channel located on a different satellite, the unit will automatically toggle to that satellite.

DISH Network programming (DISH 500)

DISH Network receivers must have the "SW42" switch installed in order to toggle between the primary 119° satellite and the alternate 110° satellite. (Consult your receiver manual for the procedure to reach the "check switch" menu.)

To install the "SW42" switch:

1. Before turning on your MV3500A system, make sure that your satellite receiver and television are turned on and your receiver is on the "point dish" menu. (Consult your owner's manual to reach this menu.)

2. Turn on the MV3500A system and wait for signal acquisition on satellite 119°.

3. After signal is acquired, you have 6 minutes to complete Check Switch test. Consult your receiver manual for instructions on running this test. Be sure that Superdish and Alternate are unchecked if applicable. Onscreen options may vary by receiver.

4. During the Check Switch Test, the receiver will begin checking the switch by toggling between satellites. When this is completed, SW42 will appear on the screen. It will be at the top of the screen, satellite designations will be below, showing odd and even transponders. See illustration.

If a switch other than SW42 appears, or you have an X in one of the boxes below the satellites, repeat Check Switch Steps.

5. Your system is now set up to toggle between satellites. It will automatically move to the correct satellite when a channel is selected with your remote control.

NOTE: Once these steps are completed, you won't have to perform this test again, unless Check Switch was performed on another satellite dish, such as a home dish.

Toggle: Your Winegard automatic satellite dish will move from the primary to the alternate satellite in order to receive multi-satellite programming.

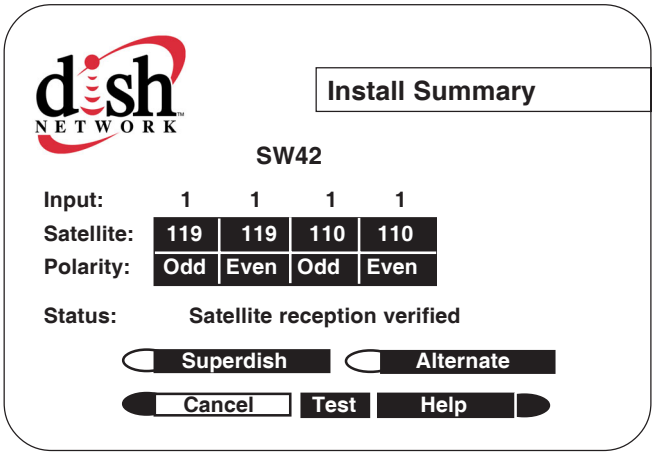

Check Switch screen display

NOTE: Be sure the "Superdish" and "Alternate" boxes ARE NOT checked.

PARTS INCLUDED:

1 Radome
1 Power switch
1 Wall plate (white)
1 Surface mount box
1 Cable entry plate
3 Base feet
large yellow flag connector
2 small red flag connectors

All required screws, washers, bolts, and nylocks
1 base with electronics, dish, dual LNBF
Silicone sealant
Surface Wipes
30’ Coax Cable
30’ Power Cable

TOOLS NEEDED FOR UNPACKING & INSTALLATION:

Level
Drill w/3/4” bit
1-1/4” hole saw (if mounting switch in wall)
Phillips screw driver #2

3/8” Open end wrench
7/16” Open end wrench
Sealant (consult RV manufacturer for proper type for your roof material)

UNPACKING THE UNIT

1. Open box and remove packing material.

If using knife to open carton, BE CAREFUL. Do not cut the dome on the unit.

BE CAREFUL when removing unit. Dome is attached to base by only 3 pieces of tape, NOT BY SCREWS.

2. Lift dome out of box vertically. Then lift unit out of box vertically. **Do not turn box and “roll” out, or turn upside down to remove.**

USE 2 PEOPLE when removing the unit from the carton.

DO NOT PAINT DOME! Painting dome will cause signal degradation.

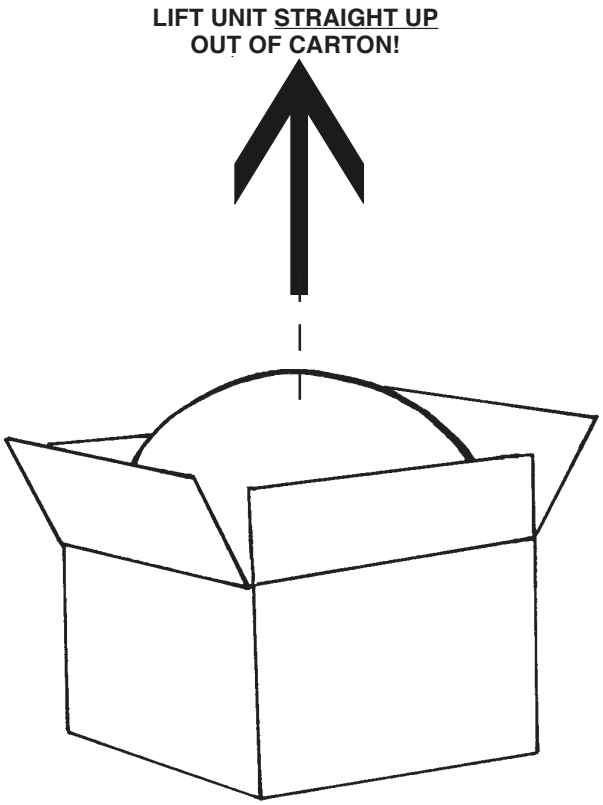

Installation Diagram

FIGURE 2

CENTER LINE OF VEHICLE

BASE FOOT

REFLECTOR

BASE FOOT

LIMIT SWITCH CABLES

CONTROL UNIT

LNBF

ELEVATION MOTOR

AZIMUTH MOTOR

+12VDC POWER

(2) 7/16" NYLOCKS

TO RECEIVER

CONNECTORS

REAR BASE FOOT MUST BE PARALLEL TO THE CENTER LINE OF THE VEHICLE.

USED FOR SECOND RECEIVER HOOK-UP (CABLE NOT INCLUDED)

Control Box detail

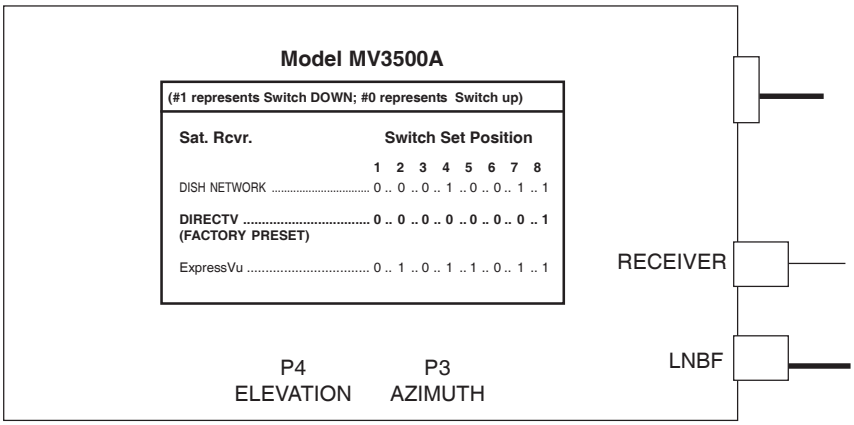

ELECTRONICS INTERIOR VIEW

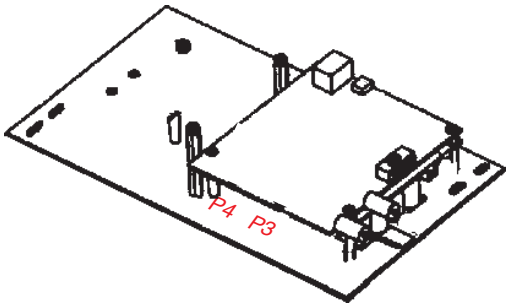

Installing unit on roof of vehicle —

Install in DRY conditions only!

IMPORTANT! Do not install this system in the rain, or under any wet conditions. Moisture may affect electronics and void your warranty!

1. For best performance and to reduce signal acquisition time, park vehicle on a level surface; level the RV.

2. Select a level spot on your roof for installation.

Using the chart, determine the **minimum** distances to other equipment.

Obstruction Ht.	Unit Clearance
8”	4”
10”	11.5”
12”	19”
15”	32”

FIGURE 3

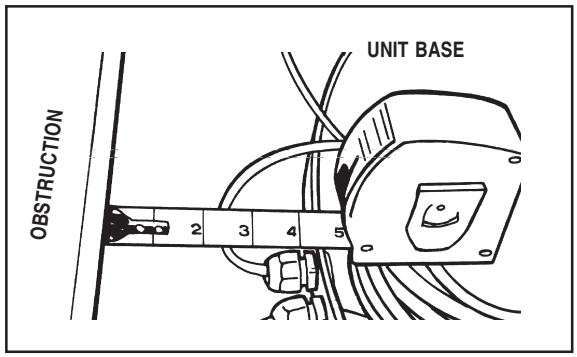

<u>WARNING:</u> Level the base front to back and side to side. If base is not level the MV3500A may require more time to locate the correct satellite or may not locate the correct satellite.

- **Be sure no roof-mounted equipment is blocking the satellite “line of sight”, Fig. 3**
- You will need to decide where the wires will enter the vehicle. A coax and a power wire (minimum 16 gauge) will need to be run into the vehicle.

WARNING: Many +12VDC sources can cause the unit to fail. Select a filtered source, preferably a dedicated line to the battery.

3. Remove dome. Place dome in safe spot to avoid damage. Place base on vehicle roof in the location selected.

4. Attach each mounting foot to base by securing with two 7/16” nylocks. See page 5 for foot locations.

5. After selecting location for unit (see number 2), put the unit on the centerline of the vehicle.

REAR MOUNTING FOOT MUST BE PARALLEL WITH THE CENTER LINE OF VEHICLE. See pg. 5.

6. Place the unit on the roof in its permanent location and mark around the base bracket, Figure 4. (Make sure the **rear adjustable base foot is parallel with the center line of the vehicle**. Refer to page 3, Figure 1A).

FIGURE 4

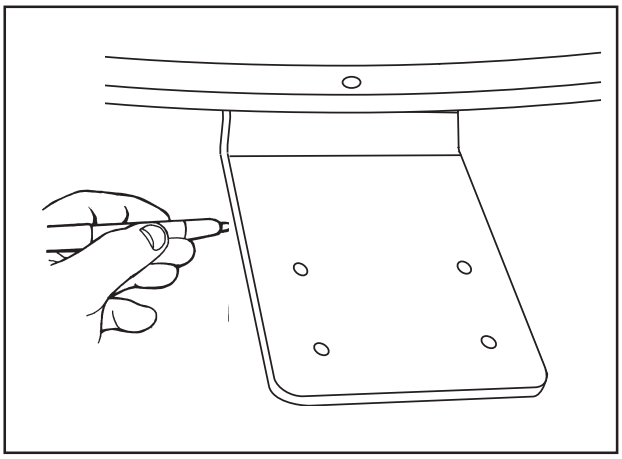

7. Clean roof area where the base feet will be attached to the roof. Do not erase your marks!

8. Put approved sealant in the areas marked for the base feet. Place base feet on top of the sealant and screw down with the (4) #10 screws (provided) for each foot.

9. After all base feet are secured to roof, put sealant around edge of feet and over screws. Replace base on screws and reinstall nut.

FIGURE 5

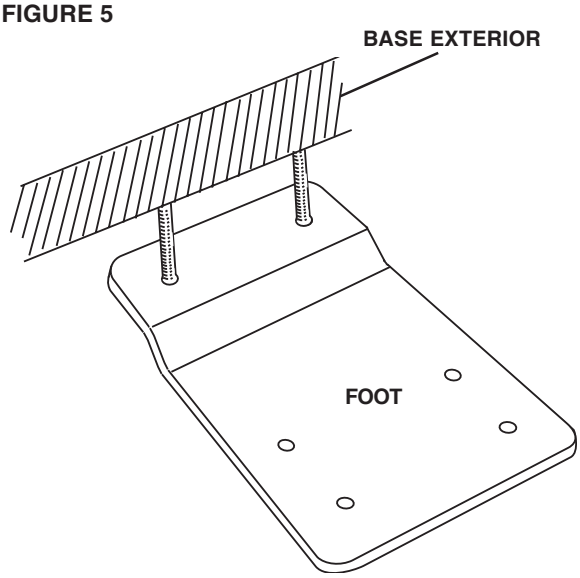

Installation

Cable entry installation —

1. Decide the best **location for the cables** to enter the vehicle, *and* the **location of the power switch and receiver** (see “Installing the switch and receiver”on pages 9 and 10). Drill a 1/2” hole in the roof, push wires inside. Make proper connections.

You must have filtered +12 VDC power source.

2. Place cable-entry plate over hole and cables. Screw in place. Seal plate and screw holes with approved sealant (not included).

3. Depending on the length of the cable on the roof, you may need to use cable clamps or wire ties (not provided) between the unit and your cable-entry plate. Clamping the cable every 12”-16” should eliminate any unnecessary cable movement, Figure 6.

FIGURE 6

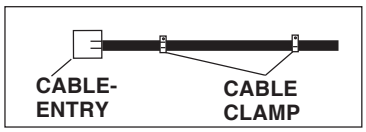

INSTALLING THE DOME

Insert screw in holes on dome rim. Be sure bolt is vertical; not tilted to side. Tighten to 20 in.-lb., or approximately until washer is visible around screw head.

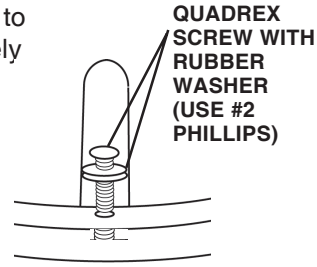

CAUTION:

<u>DO NOT</u>

<u>OVERTIGHTEN!!</u>

INSTALLING THE POWER SWITCH

1. Choose a location to install the MV3500A power ON/OFF switch. Remember when selecting a location that you will need to run the +12VDC power cable from the MV3500A to the switch. **Be sure the switch is in the OFF position before continuing.** See Figure 7 page 9.

Wall or panel mount: Drill 1-1/4” hole, pull wires through wall or panel.

Surface mount: Determine location and direction of box. Mount box and feed wire into one of the box open ings. Snap the rocker switch into the switch plate. **<u>Be sure switch is off!</u>**

2. Connect the ground wire from the vehicle and the BLACK ground wire from the MV3500A together, using large yellow flag connector.
3. Connect the YELLOW flag connector to the silver spade on the switch.
4. Connect the RED wire from the MV unit to the small RED flag connector.
5. Connect small RED flag connector to center spade on switch.
6. Connect the +12 V power wire from the vehicle to a small RED flag connector.
7. Connect small RED flag connect to isolated spade on switch.

INSTALLING THE POWER SWITCH DIAGRAM

FIGURE 7

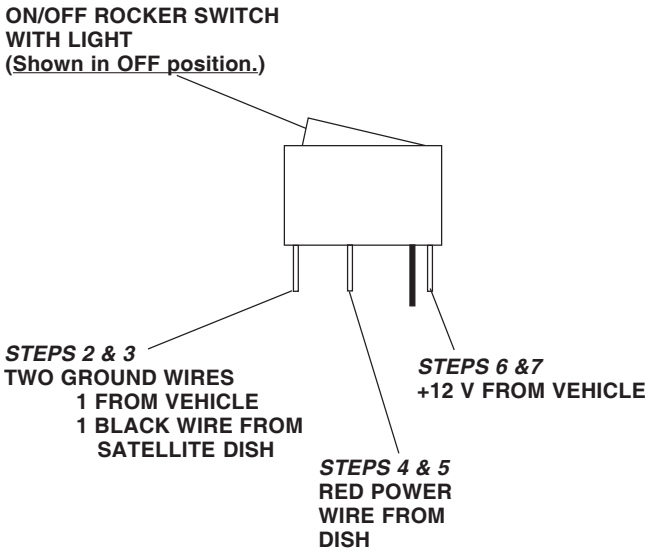

Connecting the receiver —

Connecting one receiver

1. Connect the coax cable from the MV3500A to the **"SATELLITE IN"** on the receiver.

Connecting two receivers

1. Connect the coax cable coming from the MV3500A to the " SATELLITE IN" input on the primary receiver. The primary receiver is the receiver used most often and will toggle between satellites.

2. Run a second cable through the empty Heyco opening and connect to the ground block-type feed through and connect the other end of this cable to "Satellite IN" input on the second receiver. **NOTE: Secondary receiver will not toggle.**

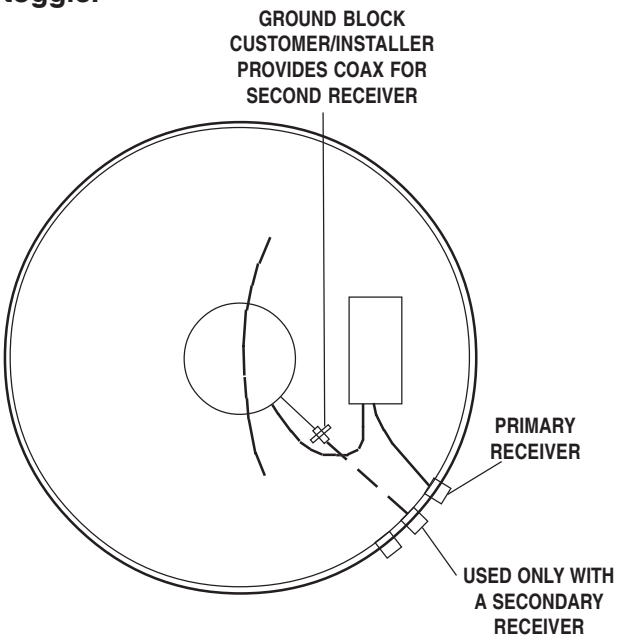

Initializing & replacing the dome after connecting the receiver(s) —

1. Be sure vehicle is in a location free of all obstructions and with a clear view of the satellite.

2. Power up unit, turn on receiver. **Verify that the correct satellite is found. Refer to page 3 for detail of operation.**

3. Install dome. **NOTE:** After connectors are tightened, **apply bead of silicone around the connector** where the exterior hex nut touches the base and **around the cables** where they enter the connector on the exterior of the unit. See drawing below. **If second receiver is not used**, apply silicone to seal center hole of third connector. See drawing below.

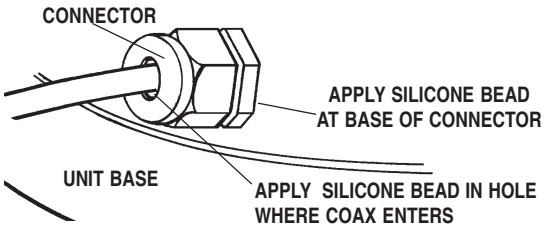

PROBLEM	SOLUTION
The MV3500A does not attempt to find a satellite or it never moves.	1. Check your Power switch to verify that it is in the **ON** position. 2. Check +12 V wires at unit to verify power. Check fuse on electronics.
The dish never stops on any of the signals that it sees.	1. Make sure that your receiver is set up correctly. For DISH Network, the check switch should read either "**Unknown**" or "**SW42**". For DirecTV the receiver should be set for a **Two Satellite Oval Dish.**
With DIRECTV, the dish will find the alternate satellite but it never finds the primary satellite.	Make sure that the Switches on the Electronics Control Box are set for DirecTV. See page 3. These switches are found under the dome, inside the Electronics Control Box.
I am not getting all the DISH Network channels I subscribed to.	1. Go to the check switch menu in receiver. Make sure that it's set for SW42 and lists both even and odd transponders on satellites 110° and 119°.
The MV3500A never sees any signals, it just keeps searching.	1. Rain, Snow or excessive Dew on the dome can interrupt the signal. Snow and Dew can be brushed off the dome. If Heavy rain or Snow fall is blocking the signal, it may be necessary to wait until the weather clears. 2. Check to see if the Southern sky is clear. Trees, Buildings, Large signs or an Overpass can block the signal. Find an area where you can be sure that this is not the problem and try again. 3. Make sure the receiver has power and the satellite dish is connected to the "Sat In".

Specifications & Warranty

Features and specifications

- One button operation.
- Depending on receiver type, you can access satellites 119°, 110°, 101° or 92°.
- No user input required.
- No data port required for DISH Network®, DIRECTV® or ExpressVu.
- Elevation range 18° to 74.5°; azimuth +360° (0-720°)
- 30' power cable and 30' coaxial cable included.
- Dome UV protected.
- Compact size —
  32" diameter, 15-3/4" height
  Weight of unit - 28 lbs.
  Shipping weight - 41 lbs.
- Operating temperature
  -13°F to +140°F

WINEGARD MOBILE PRODUCTS LIMITED WARRANTY
(2 YEARS PARTS; 1 YEAR LABOR)

Winegard Company warrants this product against defects in materials or workmanship for a period of two (2) years from the date of original purchase. During year one (1) of such warranty, Winegard Company will also pay authorized labor costs to an authorized Winegard dealer to repair or replace defective products. No warranty claim will be honored unless at the time the claim is made, Customer presents proof of purchase to an authorized Winegard dealer (to locate the nearest authorized Winegard dealer, contact Winegard Company, 3000 Kirkwood Street, Burlington, Iowa 52601, Telephone 319-754-0600 or visit www.winegard.com). Customer must provide proof of purchase with a dated sales receipt for the Winegard product to verify the product is under warranty. If the date of purchase cannot be verified, the warranty period shall be considered to begin thirty (30) days after the date of manufacture.

If a defect in material or workmanship is discovered, Customer may take the product to an authorized Winegard dealer for service. Customer must provide proof of purchase to verify the product is under warranty. If the product is brought to an authorized Winegard dealer for service prior to expiration of year one (1) of the warranty period and a defect in material or workmanship is verified by Winegard Technical Services, Winegard Company will cover the Winegard dealer's labor charges for warranty service. The Winegard dealer must contact Winegard Technical Services in advance for pre-approval of the service. Approval of the service is at the sole discretion of Winegard Company.

Alternatively, Customer may ship the product prepaid to Winegard Technical Services (located at 3000 Kirkwood Street, Burlington, Iowa 52601, Telephone 319-754-0600). Customer must return the product along with a brief description of the problem and provide Winegard Technical Services with Customer's name, address, and phone number. Customer must also provide proof of purchase to verify the product is under warranty. If the product is returned before the expiration of the warranty period, Winegard Company will (at its option) either repair or replace the product.

This Limited Warranty does not apply if the product has been damaged, deteriorates, malfunctions or fails from: improper installation, misuse, abuse, neglect, accident, tampering, modification of the product as originally manufactured by Winegard in any manner whatsoever, removing or defacing any serial number, usage not in accordance with product instructions or acts of nature such as damage caused by wind, lightning, ice or corrosive environments such as salt spray and acid rain.

RETURN AUTHORIZATION POLICY

A Return Material Authorization (RMA) is required prior to returning any product to Winegard Company or Winegard Warranty Services under this warranty policy. Please call our Technical Services Department at (800) 788-4417 or send an e-mail to warranty@winegard.com to obtain the RMA number. Please furnish the date of purchase when requesting an RMA number. Enclose the product in a prepaid package and write the RMA number in large, clear letters on the outside of the package. To avoid confusion or misunderstanding, a shipment(s) without an RMA number(s) or an unauthorized return(s) will be refused and returned to Customer freight collect.

WINEGARD COMPANY DOES NOT ASSUME ANY LIABILITIES FOR ANY OTHER WARRANTIES, EXPRESS OR IMPLIED, MADE BY ANY OTHER PERSON.

ALL OTHER WARRANTIES WHETHER EXPRESS, IMPLIED OR STATUTORY INCLUDING WARRANTIES OF FITNESS FOR A PARTICULAR PURPOSE AND MERCHANTABILITY ARE LIMITED TO THE TWO YEAR PERIOD OF THIS WARRANTY.

In states that do not allow limitations on implied warranties, or the exclusion of limitation of incidental or consequential damages, the above limitations or exclusions do not apply.

Some states do not allow limitations on how long an implied warranty lasts, or the exclusion of limitation of incidental or consequential damages, so the above limitations or exclusions may not apply to you.

This warranty gives Customer specific legal rights. Customer may also have other rights that may vary from state to state.

Rev. 12/19/05

WINEGARD®

Winegard Company • 3000 Kirkwood Street • Burlington, IA 52601 • 319/754-0600 Fax 319/754-0787 • www.winegard.com
Printed in U.S.A. © 2005 Winegard Company 2452063 Rev. 12/19/05