A Guide to TracVision R5/R4

owner's manual

- **Installation Instructions**
- **User's Guide**
- **Technical Manual**

Satellite Television

KVH TracVision® R5/R4

Congratulations!

You have selected one of the most advanced land-mobile satellite tracking systems available today. KVH® Industries' TracVision® R5/R4 is designed for use with European and North American DVB®-compatible satellite services, as well as DIRECTV®. This manual provides detailed instructions on the proper installation, use, and maintenance of your TracVision R5/R4 system. **Before using this manual, be sure to check for any addenda, which might detail changes to the manual's information.**

Throughout this manual, important information is marked for your attention by these icons:

A helpful tip that either directs you to a related area within the manual or offers suggestions on getting the highest quality out of your system.

An alert to important information regarding procedures, product specifications, or product use.

Information about installation, maintenance, troubleshooting, or other mechanical issues.

An electrical safety warning to help identify electrical issues that can be a hazard to either this KVH product or a user.

TracVision R5/R4 Serial Number

This serial number will be required for all troubleshooting or service calls made regarding this product.

Direct questions, comments, or suggestions to:

KVH Industries, Inc.
50 Enterprise Center
Middletown, RI 02842-5279 USA
Tel: +1 401 847-3327
Fax: +1 401 849-0045
E-mail: info@kvh.com
Internet: www.kvh.com

KVH Europe A/S
Kokkedal Industripark 2B
2980 Kokkedal, Denmark
Tel: +45 45 160 180
Fax: +45 45 160 181
E-mail: info@kvh.dk
Internet: www.kvh.com

If you have any comments regarding this manual, please e-mail them to manuals@kvh.com. Your input is greatly appreciated!

KVH Part # 54-0157 Rev. J

© 2006, KVH Industries, Inc.

TracVision® and KVH® are registered trademarks of
KVH Industries, Inc.

The unique light-colored dome with dark contrasting base is a registered trademark of KVH Industries, Inc.

DVB® (Digital Video Broadcasting) is a registered trademark of the DVB Project.

DIRECTV® is an official trademark of DIRECTV, Inc.

DISH Network™ is an official trademark of
EchoStar Communications Corporation.

ExpressVu is a property of Bell ExpressVu, a wholly owned
subsidiary of Bell Satellite Services.

Table of Contents

1 Introduction 1-1

1.1 Digital Satellite Television 1-1

1.2 System Overview 1-2

1.2.1 TracVision R5/R4 Components 1-3

1.2.2 Satellite TV Receiver 1-3

1.3 Materials Provided with TracVision R5/R4 1-4

1.3.1 Additional Materials Required for TracVision R5/R4 Use . . .1-5

2 Installation 2-1

2.1 Choosing the Best Location 2-3

2.2 Mounting the Antenna Unit 2-4

2.3 Connecting System Components 2-8

2.3.1 Connecting the Antenna Data/Power Cable 2-9

2.3.2 Connecting to Vehicle Power 2-10

2.3.3 Connecting the Receiver Ground Wire 2-11

2.3.4 Installing the Switchplate 2-11

2.3.5 Connecting the Antenna RF Signal Cable to the Receiver 2-12

2.3.5.1 Installing Two Receivers and TVs *(North American Systems Only)* 2-12

2.3.5.2 Connecting Three or More Receivers and TVs *(North American Systems Only)* 2-13

2.3.6 Sealing the Cable Access Hole 2-14

2.4 Activating the Receiver 2-14

2.5 Selecting the Active Satellite 2-15

2.5.1 Installing Your Selected Satellites 2-16

2.5.2 Programming User-defined Satellites 2-18

2.6 Setting the Skew Angle *(European Systems Only)* 2-24

2.7 Testing the System 2-26

2.8 Configuring TracVision R5/R4 for Remote Satellite Dish Operation 2-27

2.9 Changing Geographic Location 2-28

3 Using Your TracVision R5/R4 3-1

3.1 Turning On the System 3-1

3.2 Changing Channels and Switching Between Satellites 3-2

3.2.1 Using the TV/SAT Switch to Switch Between Satellites 3-4

3.2.2 DISH 500 Mode 3-6

3.3 Watching Television 3-8

4 Troubleshooting 4-1

4.1 Causes and Remedies for Common Operational Issues 4-2

4.1.1 Improper Wiring 4-2

4.1.2 Insufficient Power 4-2

4.1.3 Incorrect Satellite Configuration 4-2

4.1.4 Satellite Signal Blocked 4-3

4.1.5 Dew or Rain Pooling on Dome 4-3

4.1.6 Satellite Coverage Issue 4-3

4.1.7 Vehicle Turning During Startup *(TracVision R5 only)* 4-3

4.1.8 Incorrect or Loose RF Connectors 4-4

4.1.9 Type of Multiswitch Used (North American Systems Only) 4-4

4.1.10 Stationary Use Only *(TracVision R4 only)* 4-4

4.2 Receiver Troubleshooting 4-4

4.2.1 Receiver Wiring 4-4

4.2.2 Receiver Faulty 4-4

4.3 Antenna Faults 4-5

4.4 Computer Diagnostics 4-5

5 Maintenance 5-1

5.1 Warranty/Service Information 5-1

5.2 Preventive Maintenance 5-1

5.3 Replaceable Parts 5-2

5.4 Reshipping the Antenna 5-3

Appendix A System Specifications A-1

Appendix B Switchplate Template B-1

1 Introduction

1.1 Digital Satellite Television

Your TracVision R5/R4 satellite TV antenna is fully compatible with the Digital Video Broadcasting (DVB) satellites, as well as Digital Satellite Services (DSS), such as DIRECTV. As a result, you will be able to receive and decode signals from your chosen satellite services with the proper programming and hardware (e.g., the satellite TV receiver).

Your TracVision R5/R4 comes with a pre-programmed "satellite library" of North American and European satellite services. When configuring the TracVision R5/R4, you may choose a pair of satellites from the library to be active in the system and with your receiver. *If the satellite service you wish to receive is not already in the satellite library, you may also add two additional satellites of your choice to the library.*

Available Satellite Pairs

North America

Any two of the North American satellites listed below can be paired together, as long as the antenna is within the satellite's coverage area *(U.S.-style LNB required)*:

- DSS_72
- DSS_101
- DSS_119
- Echo_61
- Echo_110
- Echo_119
- Echo_148
- ExpressVu (82)
- ExpressTV (91)

You can also receive and decode signals from the DSS_110 satellite if a KVH HDTV converter (KVH Part #01-0260-05) is installed.

Europe

Any two of the European satellites listed below can be paired together, as long as the antenna is within the satellite's coverage area *(European-style LNB required)*:

- Arabsat
- Astra1
- Astra2N
- Astra2S
- Eutel_W3A
- Hispasat
- Hotbird
- Nilesat
- Sirius
- Thor
- Turksat1C

1.2 System Overview

A complete satellite TV system includes the TracVision R5/R4 connected to a receiver and a television set. The optional TV/SAT Switch allows you to select a satellite at the press of a button. A desktop or laptop computer is used to configure the system and conduct diagnostics. The complete system is illustrated in Figure 1-1. *System specifications are provided in Appendix A.*

Figure 1-1 *TracVision R5/R4 System Configuration*

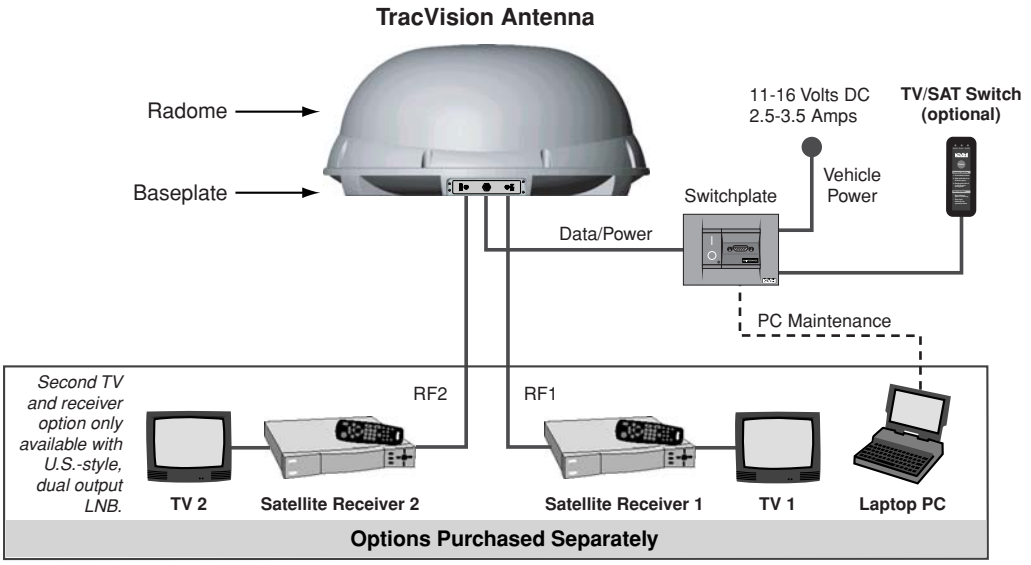

In-motion Tracking *(TracVision R5 only)*

The TracVision R5 employs a state-of-the-art actively stabilized antenna system. Once the satellite is acquired, the antenna gyro continuously measures your vehicle's motion and transmits commands to the antenna motors to keep the antenna pointed at the satellite at all times.

KVH offers an upgrade kit (KVH Part #02-1026) that adds in-motion tracking capability to the TracVision R4, allowing you to receive satellite signals while on the move.

1.2.1 TracVision R5/R4 Components

The antenna unit includes the antenna positioning mechanism, signal front end, power supply, and control elements. The antenna is a parabolic dish mounting a low noise block (LNB) converter with a built-in preamplifier. The European configuration includes a single-output LNB, while the North American system uses a dual-output LNB. A molded ABS radome encloses the fiberglass baseplate and is secured in place with standard fasteners. Connectors on the back of the baseplate join the power, signal, and control cabling from units inside the vehicle.

The dual-output LNB in the North American systems allows two receiver/TV pairs to be connected directly to the antenna. Three or more pairs can be connected to the system if an active multiswitch is installed. See Section 2.3.5, "Connecting the Antenna RF Signal Cable to the Receiver" on page 2-12 *for details.*

1.2.2 Satellite TV Receiver - *Sold Separately*

The receiver (purchased separately) receives satellite signals from the antenna unit for signal processing and channel selection, and sends the signals to the TV set for viewing. Please refer to the receiver's User's Manual for complete operating instructions.

Before you can start watching satellite TV using your TracVision antenna, you will need to activate your receiver. Refer to Section 2.4, "Activating the Receiver" on page 2-14 *for more details.*

1.3 Materials Provided with TracVision R5/R4

Table 1-1 lists the units, cables, and materials packed in the TracVision R5/R4 package by name and KVH part number.

Cables for the TracVision R5/R4 are stored beneath the antenna unit during shipping.

Table 1-1 *TracVision R5/R4 Packing List*

Component	KVH Part No.
Antenna Unit *(TracVision R5)*, comprising:	01-0266-01† 01-0266-02†† 01-0266-03††† 01-0266-04††††
Antenna Unit (*TracVision R4)*, comprising:	01-0267-01† 01-0267-02†† 01-0267-03††† 01-0267-04††††
RF Cable (28 ft/8.5 m)	32-0417-28
Data/Power Cable (28 ft/8.5 m)	32-0730-28
PC Data Cable (6 ft/1.8 m)	32-0628-06
Kitpack*	72-0101
Owner's Manual	54-0157
Receiver Ground Wire	32-0583-50
Switchplate	02-1023-01
TV/SAT Switch *(optional)*	01-0245

† North American TracVision R5/R4 system (set to DIRECTV)
†† North American TracVision R5/R4 system (set to DISH Network)
††† North American TracVision R5/R4 system (set to ExpressVu)
†††† European TracVision R5/R4 system
* A complete listing of kitpack contents is provided in Table 2-2.

1.3.1 Additional Materials Required for TracVision R5/R4 Use

In North America, you can purchase and/or activate a receiver directly from KVH. Call KVH at 1-888-584-4163 for details.

To make full use of your new TracVision R5/R4 and receive satellite TV on the road, you will need to provide/purchase the following:

- Television
- Appropriate receiver for your selected satellite TV service

2 Installation

Your TracVision R5/R4 is designed for simple installation and setup. Just follow these easy steps:

Table 2-1 *Installation Process*

Step	Refer to Section...
1. Choose the hardware locations	2.1
2. Mount the antenna unit	2.2
3. Connect system components	2.3
4. Activate the receiver	2.4
5. Select active satellite	2.5
6. Set the skew angle (Europe only)	2.6
7. Check out system	2.7
8. Configure for remote dish use	2.8

Plan the entire installation before proceeding! Take into account component placement, cable running distances between units, and accessibility to the equipment after installation.

Tools and Materials Required

- Electric drill
- 3⁄16" (5 mm), 5⁄32" (4 mm), and 3⁄32" (2.5 mm) drill bits and 3⁄4" (19 mm) hole saw and auger bit
- 1⁄2" wrench
- #2 Phillips and #0 flat tip screwdrivers
- RG-6 or RG-11 (75 ohms) RF cable (if installing two RF cables - refer to *Section 2.3.5 on page 2-12* for details)
- Silicone sealant, RTV, or Sikaflex
- 7⁄16" open end wrench
- Construction adhesive (e.g., Liquid Nails)
- Rivet gun and 3⁄16" (5 mm) rivets (or other fastener suitable for your specific roof construction)
- PC with Windows HyperTerminal or, if you are a KVH-authorized dealer, download the KVH Flash Update Wizard

The Flash Update Wizard is available to KVH-authorized dealers through the KVH Partner Portal.

Kitpack Contents

Table 2-2 lists the materials provided in the kitpack.

Table 2-2 *Kitpack Contents*

Part	Qty.	KVH Part No.
Tie-wraps	5	22-0013
Clamshell ventilator	1	19-0230
#6 x ¾" thread-forming screws	3	14-0298-12
¼"-20 x ⅝" hex screws	4	14-0250-10
¼" flat washers	4	14-0251
⅜" hole plugs	2	19-0282-06

2.1 Choosing the Best Location

- Since the TracVision antenna requires a clear view of the southern sky to receive satellite signals, the ideal antenna site has an unobstructed view of the horizon/satellite all around.
- Keep the antenna clear of any obstructions on the roof (e.g., air conditioners). The antenna requires a 15º to 75º look angle to receive satellite signals (see Figure 2-1).

Figure 2-1 *Antenna Blockage*

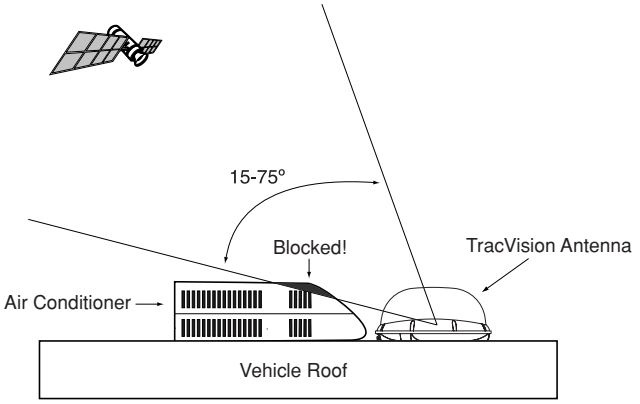

- Consider the location of the antenna relative to the location of any equipment or necessary wiring within the vehicle.
- Be sure to mount the antenna on a horizontal surface. When placed flat on the mounting surface, the mounting plates should be less than 7/16" above the mounting surface (see Figure 2-2). ***Any larger gap will warp the baseplate and seriously damage the antenna.***

Figure 2-2 *Maximum Mounting Surface Slope*

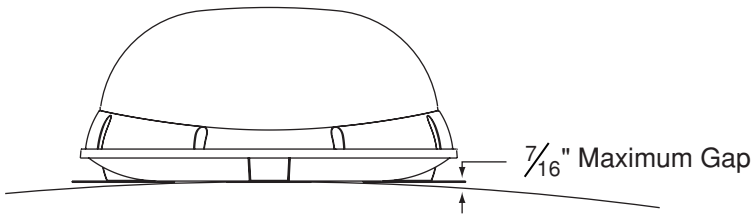

Always lift the antenna unit by the gray baseplate, never by the radome or any portion of the antenna assembly!

The mounting plate arrows may face either forward (standard installation) or backward (alternate installation) along the centerline of the vehicle for more convenient installation.

2.2 Mounting the Antenna Unit

1. Make sure that you have chosen a suitable mounting location based upon the guidelines in *Section 2.1, "Choosing the Best Location" on page 2-3.*
2. Remove the antenna unit from its shipping carton.
3. Position the antenna unit in the desired location on the centerline of the vehicle with the antenna's mounting plate arrows facing the front or rear of the vehicle. The proper orientation is illustrated in Figure 2-3.

Figure 2-3 *Proper Orientation of the Antenna Unit*

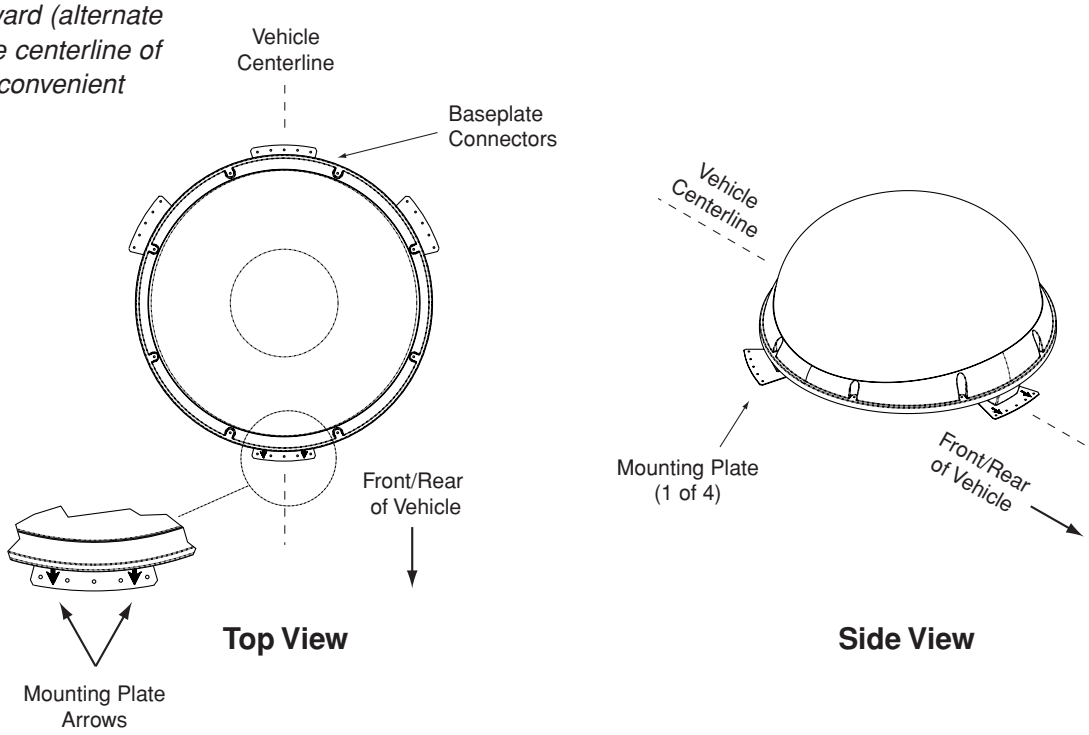

4. While the antenna is in place, mark a location on the roof for the ¾" (19 mm) cable access hole to permit convenient cable access to the antenna's baseplate connectors.
5. Using the four mounting plates and each set of five holes as templates, drill 20 $\frac{3}{16}$" (5 mm) holes through the roof of the vehicle.
6. Set aside the antenna unit and clean the roof's surface to remove any debris.

7. Seal the two baseplate holes with the plugs provided in the kitpack (see Figure 2-4).

Figure 2-4 *Antenna Baseplate (Bottom View)*

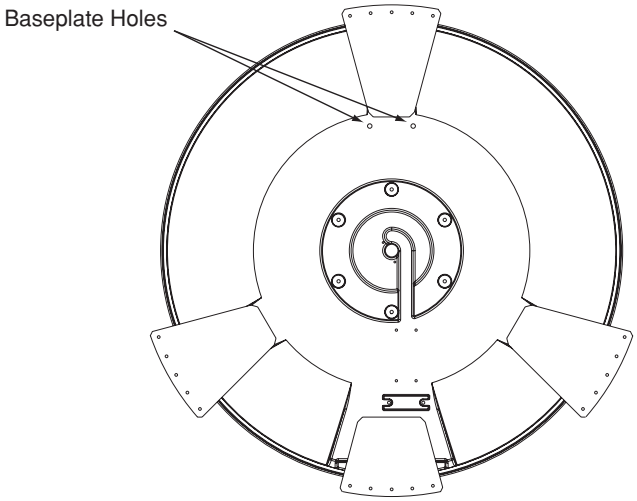

8. Apply construction adhesive to the bottom of the antenna's four mounting plates. If using a liquid construction adhesive, apply beads to the mounting plates in a zig-zag pattern.
9. Reposition the antenna, lining up the mounting plate holes with the holes in the roof. Attach the mounting plates to the roof using 3/16" (5 mm)-diameter rivets (or appropriate fasteners). Seal all rivet heads and edges with silicone.
10. Remove and save the eight pan head screws and flat washers that secure the radome to the baseplate. Carefully lift the radome straight up until clear of the antenna assembly and set aside.

If the roof's mounting surface is not perfectly flat as KVH recommends, make sure the baseplate does not warp when you attach the antenna's mounting plates. Refer to Section 2.1, "Choosing the Best Location" on page 2-3 *for further details.*

11. *(Standard Installation)* When the antenna unit is installed with the connectors facing the rear of the vehicle, the drain holes are located as shown in Figure 2-5.

Figure 2-5 *(Standard Installation) Baseplate Connectors Facing Rear of Vehicle - Factory-drilled Drain Holes*

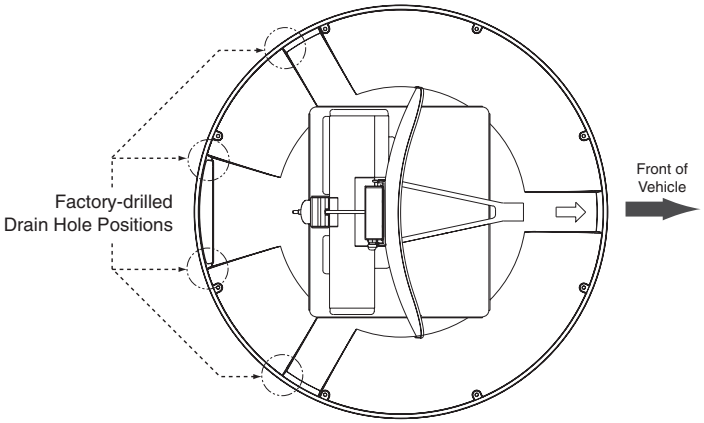

(Alternate Installation) If the antenna unit is installed with the connectors facing the front of the vehicle, you MUST drill out 3⁄16" (5 mm)-drain holes in the rear-facing side of the baseplate (see Figure 2-6). Then plug the existing factory-drilled drain holes with silicone sealant (shown in Figure 2-5).

(Alternate Installation Only) You MUST drill out the drain holes as indicated to ensure that any moisture that enters the baseplate is able to drain. Ensure that factory-drilled holes are completely sealed.

Figure 2-6 *(Alternate Installation) Baseplate Connectors Facing Front of Vehicle - Recommended Drain Holes*

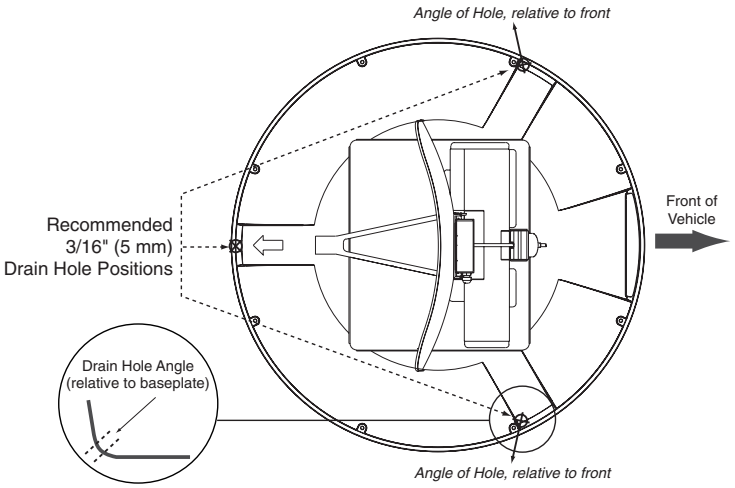

12. Cut the tie-wraps holding the antenna unit to the forward shipping restraint (see Figure 2-7).

Figure 2-7 *Forward Shipping Restraint*

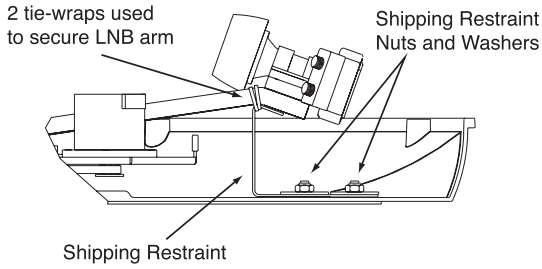

13. Remove the nuts and washers securing the shipping restraints to the baseplate (see Figure 2-8).

Figure 2-8 *TracVision R5/R4 Shipping Restraints (Top View)*

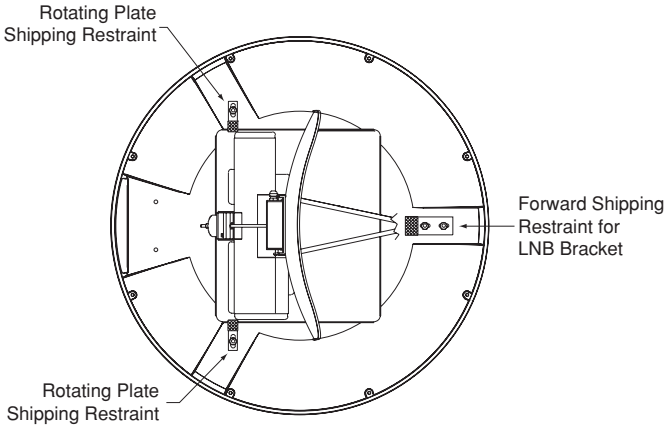

14. Remove the shipping restraints and replace the nuts and washers into their original positions. **All nuts and washers removed in Step 13 must be reinstalled. These nuts and washers secure the baseplate to the mounting plates.**

15. Place the radome onto the baseplate (labels facing the sides of the vehicle) and secure in place using the eight pan head screws and flat washers removed in Step 10.

16. Drill the cable access hole (marked in Step 4) in the vehicle's roof.

Save the shipping restraints, washers, and nuts in case the antenna unit needs to be removed and shipped to another location. Four ¼″ x ⅝″ hex head screws have been provided in the kitpack for shipping as the bolts used to hold the shipping restraints during initial shipping are integral parts of the mounting plates.

Be sure to consider the 28' length of the power and data cables when choosing a location for the switchplate. If you require longer cabling, an additional power supply ***MUST*** *be used. Failure to install an additional power supply can result in serious damage to the antenna unit. KVH offers several cable packages:*

45' Cables with Power Supply
KVH Part #72-0143-45

60' Cables with Power Supply
KVH Part #72-0143-60

45' Cables without Power Supply
KVH Part #32-0730-45

60' Cables without Power Supply
KVH Part #32-0730-60

Power Supply
KVH Part #19-0297

A full-scale panel cutout template has been provided in Appendix B.

2.3 Connecting System Components

The following sections provide instructions for properly wiring the antenna unit to the components inside the vehicle.

Locating the Switchplate

A switchplate has been provided to serve as the hub of the TracVision R5/R4 wiring (with the exception of the RF cable, which will be connected to the receiver). This switchplate includes an ON/OFF switch and a DB9 maintenance port for easy access to the antenna unit's software and diagnostics. Follow the steps below to select and prepare the switchplate mounting location.

1. Select a location to mount the TracVision R5/R4 switchplate. It should be installed in a dry, flat location within reach of the cables that will connect to the antenna unit.
2. Once you've decided on a suitable location, create a panel cutout in the mounting surface. Figure 2-9 illustrates the mounting dimensions and a full-scale template has been provided in *Appendix B*. The connecting cables will be routed through this cutout.

Figure 2-9 *Switchplate Panel Cutout Dimensions*

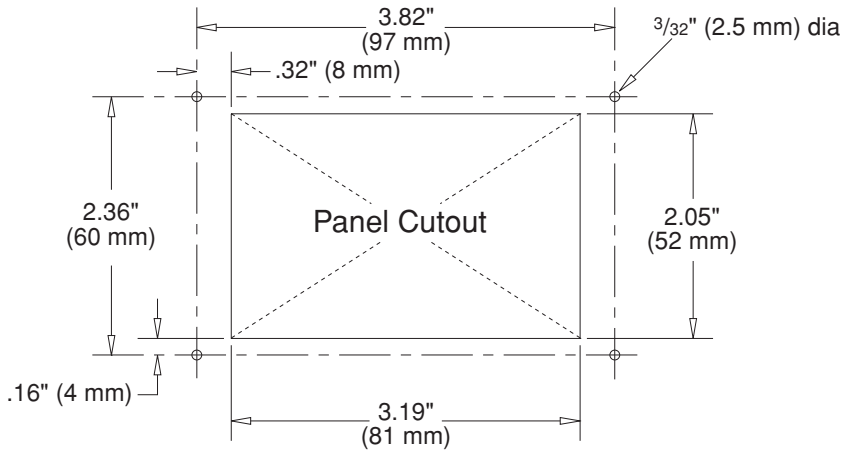

2.3.1 Connecting the Antenna Data/Power Cable

1. Connect one end of the antenna data/power cable to the antenna's data/power connector and lock in place (see Figure 2-10).

Figure 2-10 *Antenna Data/Power Connector*

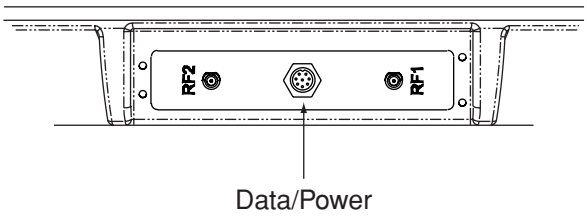

2. Route the other end of the data/power cable down through the cable access hole in the vehicle's roof and out through the switchplate panel cutout.
3. Connect the data/power cable to the switchplate's data/power connector and lock in place (see Figure 2-11).

Figure 2-11 *Switchplate Data/Power Connector*

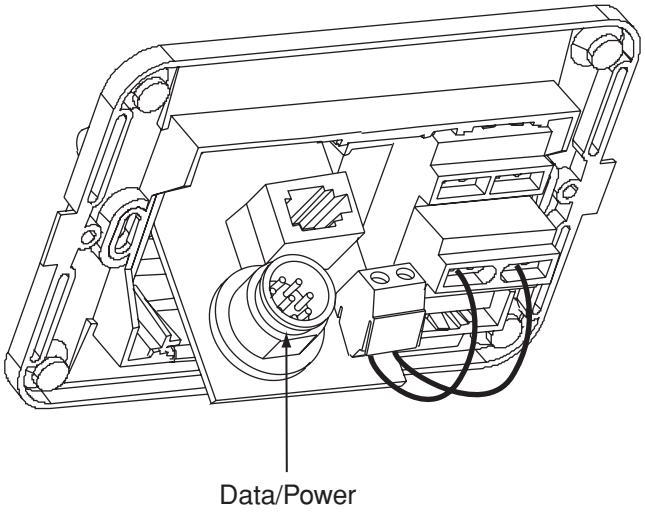

2.3.2 Connecting to Vehicle Power

Recommended Power Wiring

Short circuits may result in severe electrical shock or burns. Remove the appropriate vehicle fuse and test the circuit to ensure that no power is present before connecting the power cable.

The switchplate requires an 11-16 VDC power input. A quick-tripping circuit breaker or fuse should be installed between the switchplate and vehicle power. Circuit overload protection should be rated for 5 amps. If vehicle power fluctuates widely or is noisy, a 12 VDC 5-amp AC/DC power supply should be installed. *Test the voltage and polarity before making connections to vehicle power.*

Before connecting the antenna unit to vehicle power, remove the appropriate vehicle fuse to prevent a short circuit.

Connecting the Power Cable to the Switchplate

1. Disconnect vehicle power by removing the appropriate vehicle fuse.
2. Connect the switchplate to vehicle power as pictured in Figure 2-12.

Figure 2-12 *Switchplate Power Wiring*

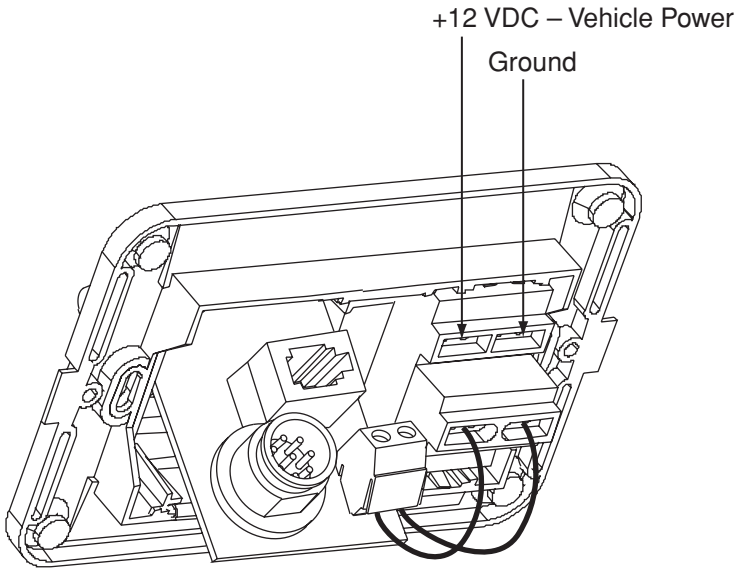

2.3.3 Connecting the Receiver Ground Wire

A grounding wire (Cable #32-0583-50) has been provided to connect your receiver to a suitable ground and protect the system. Attach the grounding wire to any suitable screw on the rear panel of the receiver with a good contact with the receiver chassis. The other end should be connected to a suitable ground.

2.3.4 Installing the Switchplate

After completing the switchplate wiring process, you must install the switchplate itself. This process, detailed in the following steps, is illustrated in Figure 2-13.

Figure 2-13 *Mounting the Switchplate*

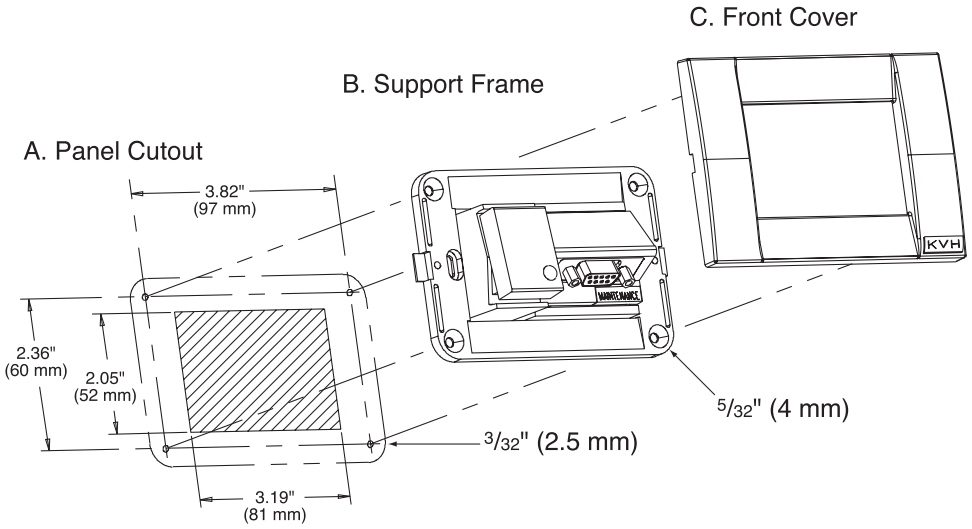

1. Fit the switchplate assembly and support frame into the panel cutout made in Step 2 of *Section 2.3, "Connecting System Components" on page 2-8* and flush to the mounting surface.
2. Drill out four 5⁄32" (4 mm) holes in the countersunk settings in the switchplate support frame.
3. Drill four 3⁄32" (2.5 mm) holes in the mounting surface using the countersunk holes in the support frame as the template. Secure the support frame and switchplate assembly to the mounting surface using four #6 self-cutting screws.

Before securing the switchplate to the mounting surface, be sure to strain-relieve the wires connecting to the switchplate connectors. Several tie-wraps have been provided to aid in strain-relieving the wires.

4. Snap the front cover into place to cover the screws and support frame.
5. Reinstall the vehicle fuse removed in Step 1 of *Section 2.3.2, "Connecting to Vehicle Power" on page 2-10.*

2.3.5 Connecting the Antenna RF Signal Cable to the Receiver

When shipped from the factory, the antenna's RF connectors are protected with caps. Leave the cap installed on the RF2 connector unless you are going to connect a second RF cable to the TracVision R5/R4.

1. Route an RF cable up through the roof's cable access hole.
2. Connect the RF cable to the antenna's RF1 connector (see Figure 2-14). Once the cable is securely connected, loosen the sealing nut at the base of the RF1 connector and tighten it onto the end of the RF cable.

Figure 2-14 *Antenna RF Connectors*

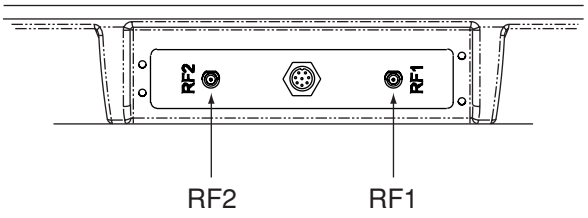

3. Connect the other end of the RF cable to the receiver's SATELLITE IN connector.

2.3.5.1 Connecting Two Receivers *(North American Systems Only)*

KVH recommends the use of RG-6 or RG-11 (75 ohms) cable for RF wiring. Use of non-RG-6 or RG-11 (75 ohms) cables will result in degraded performance. The KVH warranty does not cover degraded performance due to improper wiring.

To connect a second receiver and TV to the TracVision R5/R4 system, you must connect a second RF cable to the antenna's RF2 connector (see Figure 2-14). Route the other end of the RF cable down into the vehicle and connect it directly to the second receiver.

2.3.5.2 Connecting Three or More Receivers *(North American Systems)*

To install three or more receivers and TVs, an active multiswitch (Channel Master #6214IFD or equivalent) must be placed between the antenna unit and the receivers. Figure 2-15 illustrates typical wiring arrangements for multiple receivers. If more than four receivers are required, contact KVH for additional wiring instructions. Mount the multiswitch unit in accordance with the manufacturer's instruction sheet.

Figure 2-15 *Installing Three or Four Receivers Using an Active Multiswitch*

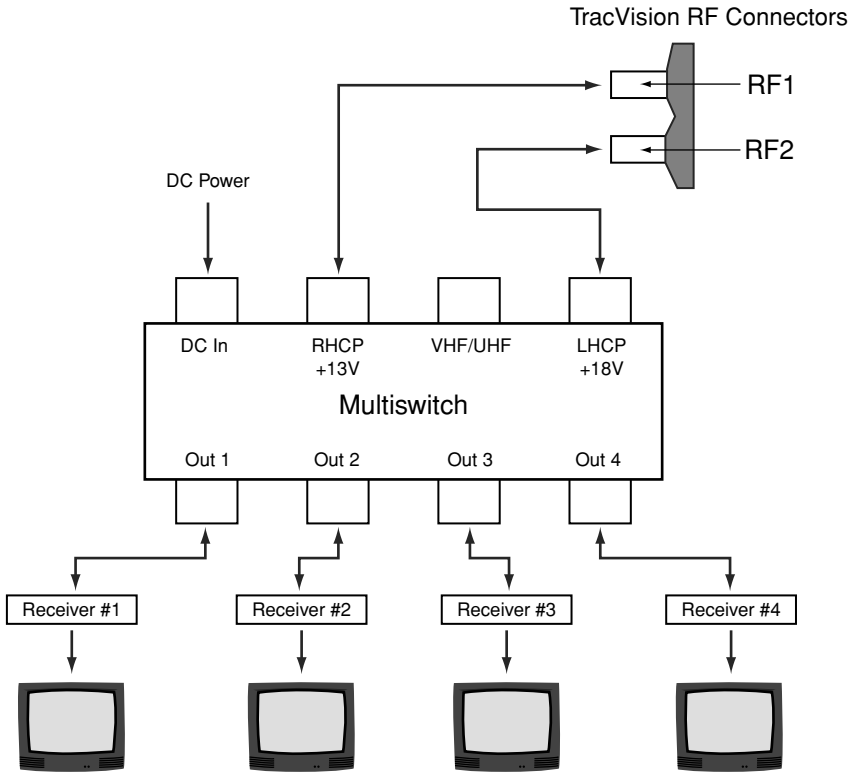

1. Connect the RF cable tagged "RF1" to the multiswitch input labeled "LNB RHCP +13V."
2. Connect a second RF cable to the multiswitch input labeled "LNB LHCP +18V."
3. Connect the multiswitch outputs to individual receiver inputs. Use RG-6 cable terminated with F-type connectors for all RF connections.

TracVision R5/R4 has the capability to switch from one satellite to another when you choose TV channels that are carried by your two selected satellites. However, the use of an active multiswitch may interfere with communication from the receivers to the antenna. In this case, you will need to use the optional TV/SAT Switch as described in* Section 3.2, "Changing Channels and Switching Between Satellites" on page 3-2.

** To order a TV/SAT Switch (KVH Part Number 01-0245), please call +1 401 847-3327.*

4. Terminate all unused output connectors with 75 ohm DC blocks (Channel Master #7184, Radio Shack #15-1259 or equivalent).

2.3.6 Sealing the Cable Access Hole

Once the RF and data/power cables are connected to the antenna, you need to seal and cover the cable access hole to protect against leakage.

Ensure the clamshell mounting screws do not puncture the cables inside the vehicle.

1. Completely seal the cable access hole with silicone sealant or RTV.
2. Install the clamshell ventilator, supplied in the kitpack, over the cable access hole using the three supplied #6 screws (see Figure 2-16).

Figure 2-16 *Installing the Clamshell Ventilator*

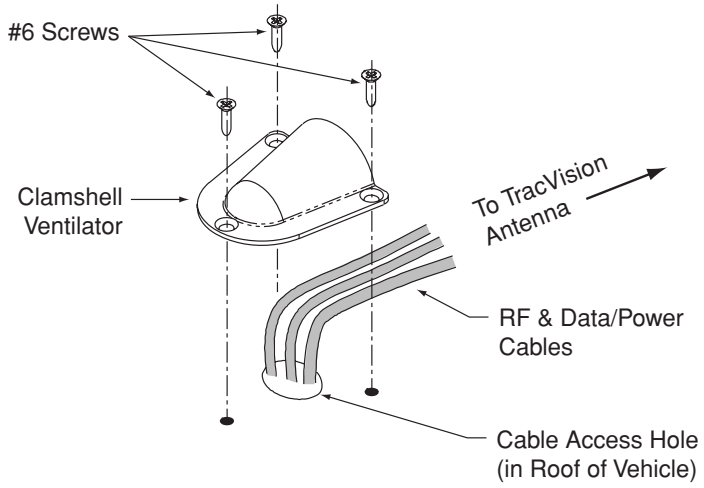

2.4 Activating the Receiver

DIRECTV and DISH Network Receiver Activation

KVH makes it easy to activate your DIRECTV or DISH Network receiver. Just call KVH at 1-888-584-4163 and ask for **Receiver Activation** (Monday - Friday, 8:30 a.m. - 5:00 p.m. ET). For other options, please refer to your receiver's User Manual.

Other Receiver Activations

Please refer to the receiver's User's Manual for activation instructions.

2.5 Selecting the Active Satellite

As noted previously, TracVision R5/R4 can track a variety of DVB-compatible and DSS (DIRECTV) satellites. The system contains a preprogrammed library of North American and European satellites. The satellites listed in the TracVision R5/R4 satellite library will be sufficient for most users. However, you can install up to two user-defined satellites. To install a user-defined satellite, proceed to *Section 2.5.2, "Programming User-defined Satellites" on page 2-18.*

Available Satellite Pairs

North America

Any two of the North American satellites listed below can be paired together, as long as the antenna is within the satellite's coverage area *(U.S.-style LNB required)*:

- DSS_72
- DSS_101
- DSS_119
- Echo_61
- Echo_110
- Echo_119
- Echo_148
- ExpressVu (82)
- ExpressTV (91)

You can also receive and decode signals from the DSS_110 satellite if a KVH HDTV converter (KVH Part #01-0260-05) is installed.

Europe

Any two of the European satellites listed below can be paired together, as long as the antenna is within the satellite's coverage area *(European-style LNB required)*:

- Arabsat
- Astra1
- Astra2N
- Astra2S
- Eutel_W3A
- Hispasat
- Hotbird
- Nilesat
- Sirius
- Thor
- Turksat1C

To receive DISH 500 service, you will need to install the following two satellites:
Echo_119 & Echo_110

The satellite configuration on your receiver must match the satellite setting on the TracVision R5/R4 system.

*Satellite A on the TracVision R5/R4 must be the same satellite as Receiver Alternative 1 (or A, based on your receiver and must be assigned the Receiver DiSEqC 1 setting.**

*Satellite B on the TracVision R5/R4 must be the same satellite as Receiver Alternative 2 (or B, based on your receiver) and must be assigned the Receiver DiSEqC 2 setting.**

Refer to your receiver's User Manual for complete instructions for your receiver.

** DiSEqC settings apply only to European systems.*

2.5.1 Installing Your Selected Satellites

When you first connect to the system, it is preprogrammed with one of the following default satellite assignments:

- Europe: Astra 1 (Sat. A) and Hotbird (Sat. B)
- N. America (US DIRECTV): DSS_101 (Sat. A) and DSS_119 (Sat. B)
- N. America (US DISH Network/ExpressVu): Echo_119 (Sat. A) and Expressvu (Sat. B)

Should you wish to track a different satellite (either from the satellite library or a user-defined satellite), you must instruct the antenna which satellites will be in the active satellite pair.

Connecting to the TracVision R5/R4 Maintenance Port

To do so, you need to connect a PC to the maintenance port on the front of the switchplate. To configure the antenna, you will need a PC with Windows HyperTerminal installed, or if you are a KVH-authorized dealer, download the KVH Flash Update Wizard through the KVH Partner Partner Portal.

1. Connect one end of the PC data cable to the DB9 maintenance port connector on the switchplate. Connect the other end to the serial port on your PC (a 9-pin/25-pin connector adapter may be needed for some PCs).

Figure 2-17 *TracVision R5/R4 Maintenance Port*

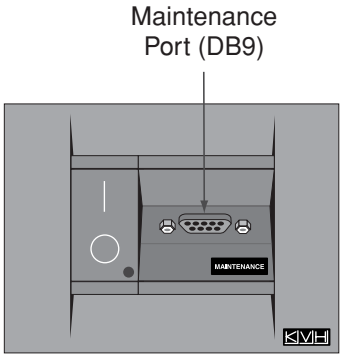

2. If you are using **HyperTerminal**, open it and establish the following settings:
   - Bits per second: 9600
   - Data bits: 8
   - Parity: None
   - Stop bits: 1
   - Flow control: None

   If you are using the **KVH Flash Update Wizard,** double-click the "KVH Flash Update Wizard" shortcut on your computer's desktop to start the wizard. *You do not need to flash the antenna to install the satellites; simply enter commands in the "TracVision Antenna Comms" window.*

3. Apply power to the TracVision R5/R4 system and the receiver(s). Allow the system to complete full initialization (about 1 minute). Data should be scrolling on the PC display to identify any system problems detected. If no data is seen, recheck your connections and setup.

Installing the Satellite of Choice from the Satellite Library

Once the data connection has been made between the PC and the TracVision R5/R4, you must assign the satellites you wish to have in the satellite pair by entering the following commands.

1. Type **HALT** then press Enter to place the antenna in Idle Mode.
2. Select which preprogrammed satellites you wish to assign. Table 2-3 lists the satellite names that are in the preprogrammed North American and European satellite library.
3. Type the following command (see the Key below) then press Enter.

SATINSTALL, <sat_a_name>, <sat_b_name>

Key:	<sat_a_name> = the name of your choice for Satellite A <sat_b_name> = the name of your choice for Satellite B *(type **None** as the name of Satellite B if you wish to install only one satellite)*

Table 2-3
Satellite Installation Names

Satellite	Install Name
North American Satellites	
DSS 72°W	DSS_72
DSS 101°W	DSS_101
DSS 119°W	DSS_119
EchoStar 61°W	Echo_61
EchoStar 110°W	Echo_110
EchoStar 119°W	Echo_119
EchoStar 148°W	Echo_148
ExpressVu (82)	Expressvu
ExpressTV (91)	ExpressTV
European Satellites	
ARABSAT 26°E	ARABSAT
ASTRA1 19.2°E	ASTRA1
ASTRA2N 28.2°E	ASTRA2N
ASTRA2S 28.2°E	ASTRA2S
Eutel_W3A 7°E	Eutel_W3A
Hispasat 30.0°W	HISPASAT
Hotbird 13.0°E	HOTBIRD
Nilesat 101 7°W	NILESAT
Sirius 5.0°E	SIRIUS
Thor 0.8°W	THOR
Turksat1C 40°E	TURKSAT
Other Installation Designations	
User-defined 1	USER1*
User-defined 2	USER2*
None	None

** USER1 and USER2 will only be available if one or two user-defined satellites have been added to the library.*

4. Type **ZAP** then press Enter to restart the system. Wait for the antenna to initialize (about 1 minute). Be sure the receiver's satellite configuration matches your chosen TracVision R5/R4 settings.

Example:

To assign Astra 2S and Hotbird for your satellite pair, *(where Astra2S is designated as Satellite A and Hotbird is designated as Satellite B)*:

Type **HALT** then press Enter.
Type **SATINSTALL,ASTRA2S,HOTBIRD** then press Enter.
Type **ZAP** then press Enter.

2.5.2 Programming User-defined Satellites

The TracVision R5/R4 satellite library has two open slots that you may use to program two user-defined satellites in case you want to install/watch a satellite that is not in the KVH predefined satellite library. To configure a user satellite, you will need to obtain the following satellite information from your satellite service provider or from sites on the Internet, such as *www.satcodx.com:*

- Satellite name
- Satellite position (longitude)
- Transponder information for each of the following polarizations/frequencies:
  - vertical high & vertical low
  - horizontal high & horizontal low

  or

  - right
  - left
- Transponder information includes:
  - frequency
  - symbol rate
  - FEC code, and
  - network ID (in hexadecimal format)
- Decoder type

Entering User-defined Satellite Data

Once the link between the PC and the TracVision R5/R4 is established as described in *Section 2.5.1, "Installing your Selected Satellites" on page 2-16,* follow the steps below to begin entering the data for your user-defined satellite.

1. Type **HALT** then press Enter.
2. Type the following command (see the Key below) then press Enter.

   SATCONFIG,USERX,YYY,Z,D,L

Key:	X = 1 or 2 (This represents the first or second user-defined satellite. Your TracVision system allows up to two user-defined satellites.)
	YYY = longitude (0-180)
	Z = E (East) or W (West)
	D = decoding type (0 = test, 1 = DSS-A, 2 = DSS-B, 3 = DVB)
	L = LNB polarization (C = circular, L = linear)

The main board has now been configured to recognize the user-defined satellite. Next, the RF board must be configured.

3. Type **@DEBUGON** then press Enter.
4. Type the following command (see the Key below) then press Enter.

@SATCONFIG,X,N,F,S,C,ID,P,B,D

Key:	@SATCONFIG = directs data to the RF Board
	X = satellite location A or B
	N = satellite table # (98 & 99 are slots for user-configured satellites)
	F = frequency in MHz (either 00000 or a range from 10700 - 12700)
	S = the satellite transponder symbol rate in Mbit/second (01000 - 29999)
	C = the FEC code (e.g., 12, 23, 34, 56, 67, 78)
	ID = the satellite network ID in hexadecimal format (0x####)
	P = the LNB polarization (v = vertical, h = horizontal, r = right, l = left)
	B = the LNB down conversion frequency (l = low, h = high, u = USA)
	D = decoding type (0 = test, 1 = DSS-A, 2 = DSS-B, 3 = DVB)

This information has to be entered for each of the following polarizations:

- vertical high
- vertical low
- horizontal high
- horizontal low

or

- right
- left

TracVision R5/R4 requires that the data fields for all transponder categories be filled in. If the selected satellite does not have information for one or more of the transponder categories, default information should be entered in the fields as follows:

Table 2-4 *Default Transponder Values*

Transponder Data	Default Value
Frequency	00000
Symbol Rate	27500
FEC Code	the same value as provided for those transponders with data
Network ID	0x0000
Polarity and Band	whichever combinations are not already provided

5. Type **@SAVE,A** then press Enter to save your settings (or **@SAVE,B** if data is for the User2 satellite.)
6. Type **@DEBUGOFF** then press Enter.
7. Type **ZAP** then press Enter to restart the system.

One of your user-defined satellites has now been added to the TracVision R5/R4 satellite library. This satellite will now be available the next time you use the SATINSTALL command.

An Example of Configuring a User-defined Satellite (Europe)

The following is an example of configuring the fictional YOURSAT 101 as the USER1 configured satellite. Prior to configuring this satellite or any others, be certain to get the most up-to-date information from one of the sources previously discussed.

Table 2-5 *Sample User-defined Satellite Configuration (Europe)*

YOURSAT 101 at 71 West, DVB decoder, Circular Polarization LNB

Horizontal High	
Frequency	11.966 GHz
Symbol Rate	27500
FEC Code	3/4
Network ID	2048 (dec) = 0x0800
Vertical High	
Frequency	11.823 GHz
Symbol Rate	27500
FEC Code	3/4
Network ID	2048(dec) = 0x0800
Vertical Low	
Data Listed	
Horizontal Low	
No Data Listed	

Example:

Based on this information, the data entered via the PC would look like this, assuming that YOURSAT 101 would be Satellite A:

```
SATCONFIG,USER1,7,W,3,L
@DEBUGON
@SATCONFIG,A,98,11966,27500,34,0x0800,H,H,3
@SATCONFIG,A,98,11823,27500,34,0x0800,V,H,3
@SATCONFIG,A,98,00000,27500,34,0x0000,V,L,3
@SATCONFIG,A,98,00000,27500,34,0x0000,H,L,3
@SAVE,A
@DEBUGOFF
ZAP
```

An Example of Configuring a User-defined Satellite (N. America)

The following is an example of configuring the fictional YOURSAT 101 as the USER1 configured satellite. Prior to configuring this satellite or any others, be certain to get the most up-to-date information from one of the sources previously discussed.

Table 2-6 *Sample User-defined Satellite Configuration (North America)*

YOURSAT 101 at 71 West, DVB decoder, Circular Polarization LNB

Right	
Frequency	11.966 GHz
Symbol Rate	27500
FEC Code	3/4
Network ID	2048 (dec) = 0x0800
Left	
Frequency	11.823 GHz
Symbol Rate	27500
FEC Code	3/4
Network ID	2048(dec) = 0x0800

Example:

Based on this information, the data entered via the PC would look like this, assuming that YOURSAT 101 would be Satellite A:

```
SATCONFIG,USER1,71,W,3,C
@DEBUGON
@SATCONFIG,A,98,11966,27500,34,0x0800,R,U,3
@SATCONFIG,A,98,11823,27500,34,0x0800,L,U,3
@SAVE,A
@DEBUGOFF
ZAP
```

2.6 Setting the Skew Angle *(European Systems Only)*

The Antenna LNB skew angle must be adjusted to optimize channel reception. Refer to your satellite service provider for the proper skew angle for the selected satellite service and geographical location. The skew angle for satellites in the KVH library can also be obtained by entering your latitude and longitude into the antenna. Determine your grid number in Figure 2-18 to find your corresponding latitude and longitude listed in Table 2-7.

Table 2-7 *Approximate Latitude/Longitude*

Grid #	Latitude	Longitude
1	67°N	7°W
2	67°N	7°E
3	67°N	22°E
4	65°N	45°E
5	63°N	7°W
6	63°N	7°E
7	63°N	22°E
8	57°N	7°W
9	57°N	7°E
10	57°N	22°E
11	55°N	40°E
12	53°N	7°W
13	53°N	7°E
14	50°N	22°E
15	47°N	7°W
16	47°N	7°E
17	43°N	7°W
18	43°N	7°E
19	43°N	22°E
20	43°N	37°E
21	36°N	7°W
22	36°N	7°E
23	36°N	22°E
24	36°N	37°E

Figure 2-18 *European Position Grid*

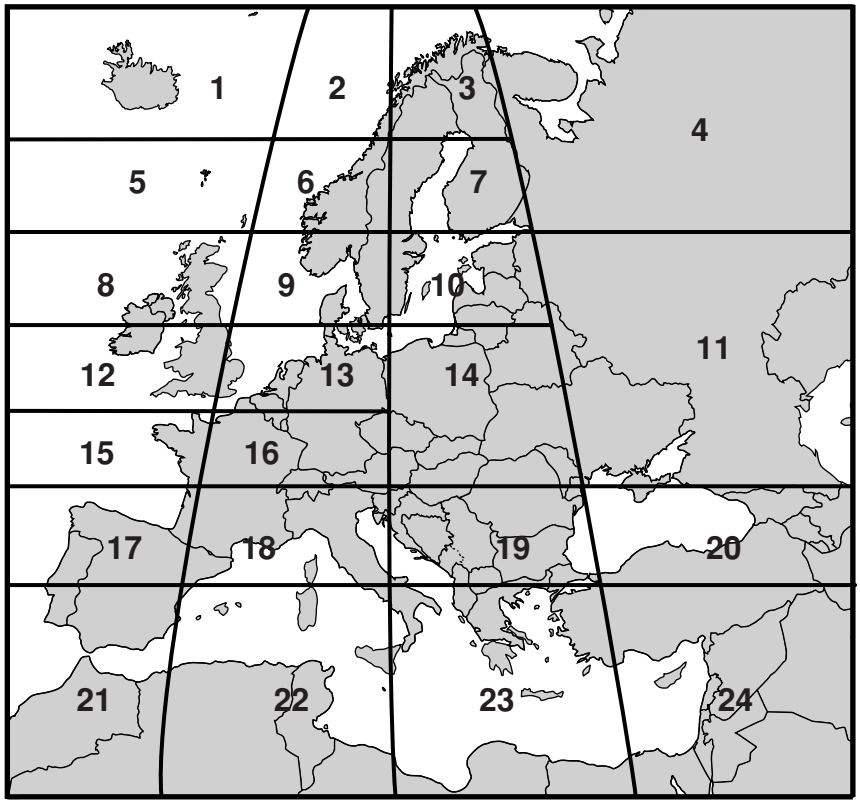

Finding the Skew Angle for a Predefined Satellite

1. Type **HALT** then press Enter.
2. Type **DEBUGON** then press Enter.
3. Type the following command (see the Key below) then press Enter.

   GPS,XX,D,YYY,E

Key:	XX = latitude (0 - 90)
	D = S (South) or N (North)
	YYY = longitude (0 - 180)
	E = E (East) or W (West)

4. Type **SKEWANGLE** then press Enter. The system will respond with the skew angle for whichever satellite is currently selected.

Adjusting the LNB Skew Angle

1. Determine the skew angle for the selected satellite and region.
2. Loosen the wing nut on the LNB clamp so that the LNB can be moved (see Figure 2-19).

Figure 2-19 *LNB Skew Angle Adjustment*

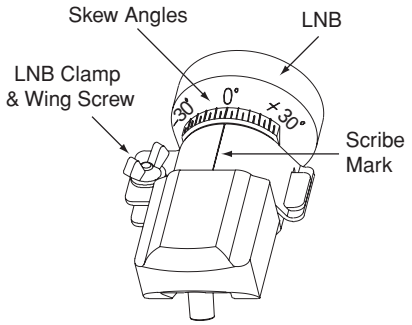

3. Carefully rotate the LNB so that the scribe mark on the LNB clamp is aligned with the proper angle measurement.
4. Tighten the wing nut and LNB clamp to secure the LNB.

2.7 Testing the System

Now all you need to do is turn the system on and ensure everything works properly. Follow the steps below to test the TracVision system.

1. Park the vehicle in a blockage-free area. The antenna requires an unobstructed view of the southern sky to receive satellite signals.
2. Turn on the receiver(s) and TV(s). For instructions on operating the receiver, refer to the receiver's User's Manual.
3. Turn on the TracVision antenna.
4. Within a few minutes, a picture should appear on the TV.
5. *(TracVision R5 only)* Take a road test and verify that the antenna tracks the satellite while the vehicle is moving.
6. When you have finished testing, shut down the system.

2.8 Configuring TracVision R5/R4 for Remote Satellite Dish Operation

In some campground locations, dense foliage will block the satellite signal. In these situations, a remote portable antenna may be the only solution to satellite signal reception.

The wiring option for the remote dish is very simple and should be installed when the TracVision R5/R4 is installed. A high-quality "A/B switch" should be used to change from TracVision R5/R4 dish reception to remote antenna operation. The recommended wiring arrangement for remote dish operation is illustrated in Figure 2-20.

Figure 2-20 *Remote Dish Wiring Configuration*

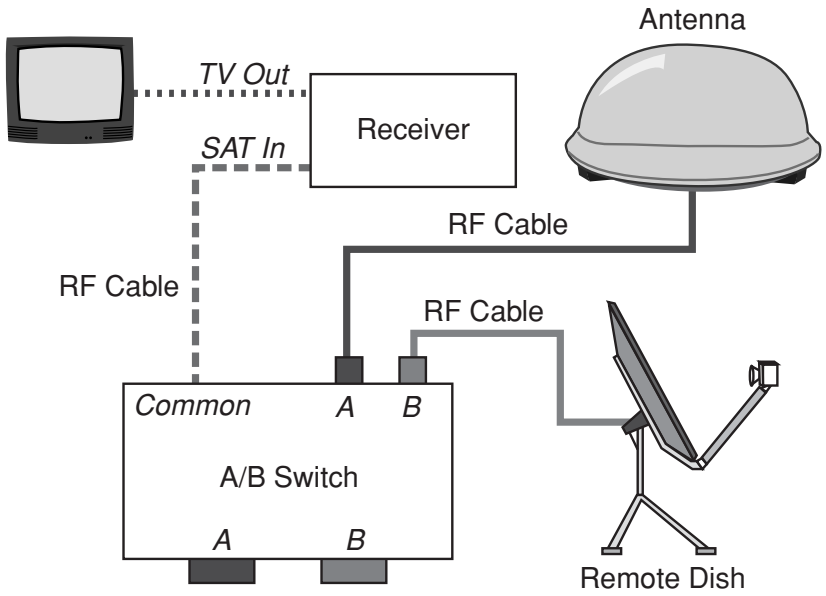

2.9 Changing Geographic Location

If you move from Europe to the U.S., or from the U.S. to Europe, you will need to modify your TracVision R5/R4 system to receive satellite TV signals in the new geographic area.

To begin receiving satellite signals in the new area, perform the following steps.

Swap LNBs

To receive the proper satellite signals in the new geographic location, your TracVision antenna must be equipped with the appropriate LNB for that location. If moving from Europe to the U.S., you will need to install a North American-style LNB. If moving from the U.S. to Europe, you will need to install a European-style LNB. Table 2-8 lists the part numbers for ordering these LNB options.

Table 2-8 *LNB Part Numbers*

Part Name	Part Number
European-style LNB	19-0196
North American-style LNB	19-0056

Install New Satellites

When you move to a new area, the list of available satellites changes. If you're moving to Europe, you will need to choose a new satellite pair from the list of available European satellites. If you're moving to the U.S., you will need to choose a new satellite pair from the list of available North American satellites (refer to *Section 2.5, "Selecting the Active Satellite" on page 2-15*). For details on installing these new satellites, refer to *Section 2.5.1, "Installing Your Selected Satellites" on page 2-16.*

You may also need to replace your television when changing geographic location. In North America, your TV must support the NTSC video standard. In Europe, your TV must support the PAL video standard.

Replace the Receiver

In order to receive satellite TV service in your new geographic location, you will need to purchase a receiver designed for that location. Refer to your satellite TV service provider for more information.

3 Using Your TracVision R5/R4

For TracVision R5/R4 to receive the satellite signals, the antenna must have a clear line of sight to the satellite. If you only receive intermittent signals or the antenna cannot find the satellite, check around your vehicle for any objects that could be blocking the signal, such as trees, buildings, highway overpasses, etc.

Figure 3-1 *Example of Satellite Blockage*

You must also be located within the selected satellite's coverage area in order to receive its signal. Refer to your satellite television service manual to check the viable coverage area. *For your convenience, KVH provides links to several web sites that offer satellite coverage information. Simply go to our web site at: www.kvh.com/footprint.*

3.1 Turning On the System

The TracVision R5/R4 system is easy to use. Antenna unit initialization and satellite acquisition are completely automatic.

1. *(TracVision R4 only)* Park your vehicle.
2. Turn on the receiver and television. (Refer to your receiver's User Manual for complete receiver operating instructions.)

To minimize the time it takes the antenna to acquire the satellite, do not change the channel during the startup process or cable unwrap.

The TracVision R4 is for stationary use only.

The satellite configuration on your receiver must match the satellite setting on the TracVision R5/R4 system.

*Satellite A on the TracVision R5/R4 must be the same satellite as Receiver Alternative 1 (or A, based on your receiver) and must be assigned the Receiver DiSEqC 1 setting.**

*Satellite B on the TracVision R5/R4 must be the same satellite as Receiver Alternative 2 (or B, based on your receiver) and must be assigned the receiver DiSEqC 2 setting.**

Refer to your receiver's User's Manual for complete instructions for your receiver.

** DiSEqC applies to European systems only*

3. Turn on the antenna using the switchplate (see Figure 3-2).

Figure 3-2 *Turning on the TracVision R5/R4*

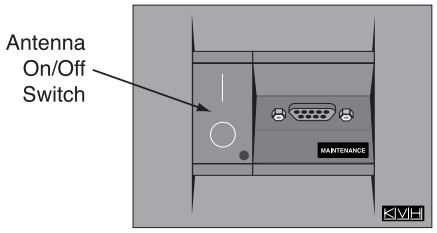

4. *(TracVision R5 only)* If the vehicle is moving, avoid turning the vehicle for 60 seconds after turning on the antenna to allow the antenna gyro to initialize properly.

3.2 Changing Channels and Switching Between Satellites

During installation, your system should have been set to the satellite pair of your choice and the system should have downloaded the appropriate channel guides. You must also have a properly configured receiver (if this has not been done, refer to your receiver's User's Manual for instructions).

Your TracVision system is programmed to track either of two satellites, stored in memory as Satellite A and Satellite B. To select between these two satellites, you can use the receiver remote control or the optional TV/SAT Switch.

If you have three or more receiver/TV pairs installed using an active multiswitch, you will need the TV/SAT Switch to switch between the two satellites.

European Services

When the TracVision R5/R4 system and the receiver have matching configurations, switching from one satellite to the other is as easy as changing the channel using the remote control. TracVision R5/R4 will automatically switch from Satellite A to B and back again as necessary to receive your selected channel.

DIRECTV

DIRECTV subscribers in certain regions of the United States will require a DSS Plus receiver to receive broadcasts from multiple satellites. If connected to the antenna's RF1 connector, the DSS Plus receiver allows you to switch satellites using the remote control. If you are a DIRECTV subscriber, but do not have a DSS Plus receiver, or you are using a multiswitch, use the optional TV/SAT Switch (see *Section 3.2.1, "Using the TV/SAT Switch to Switch Between Satellites" on page 3-4*).

ExpressVu

ExpressVu subscribers need to use the optional TV/SAT Switch to switch between satellties (see *Section 3.2.1, "Using the TV/SAT Switch to Switch Between Satellites" on page 3-4*).

DISH Network

DISH Network subscribers will need to configure the TracVision R5/R4 system to use DISH 500 mode (see *Section 3.2.2, "DISH 500 Mode" on page 3-6*), which allows automatic switching between the 119 and 110 satellites. Or you can manually switch satellites using the optional TV/SAT Switch (see *Section 3.2.1, "Using the TV/SAT Switch to Switch Between Satellites" on page 3-4*).

To order a TV/SAT Switch (KVH Part Number 01-0245), please call +1 401 847-3327.

3.2.1 Using the TV/SAT Switch to Switch Between Satellites

If you're unable to switch between satellites using the receiver remote control, you can use the optional TV/SAT Switch to easily select between Satellite A and Satellite B (see Figure 3-3).

Figure 3-3 *TV/SAT Switch*

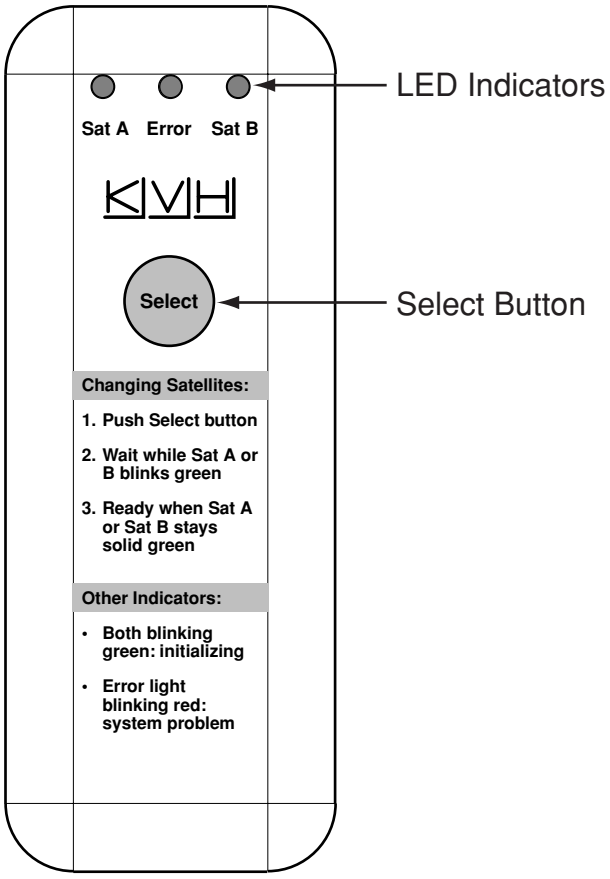

TV/SAT Switch Controls and Indicators

The Select button is used for all operator controls. The TV/SAT Switch also has three LED indicators that show its current status. Table 3-1 explains the function of each indicator.

Table 3-1 *TV/SAT Switch LED Indicators*

Indicator	Status	Meaning
Sat A	Blinking green	Wait – Searching for satellite
	Solid green	Tracking Satellite A
Error	Blinking red	System problem – *Refer to* Section 4, "Troubleshooting," *to find the possible cause*
Sat B	Blinking green	Wait – Searching for satellite
	Solid green	Tracking Satellite B

Connecting the TV/SAT Switch

To use the TV/SAT Switch, you must first connect it to the TracVision system.

1. Connect the TV/SAT Switch's data cable to the maintenance port on the switchplate (see Figure 3-4).

Figure 3-4 *Switchplate Maintenance Port*

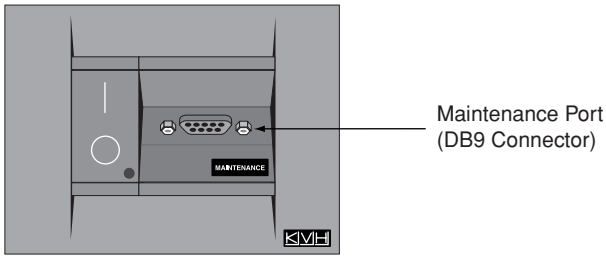

2. The Sat A and Sat B indicators blink while the system initializes.
3. Either the Sat A or Sat B indicator will turn solid green, denoting which satellite is currently being tracked.

Using the TV/SAT Switch

The TV/SAT Switch is very easy to use. All operations are controlled through a single button.

To select the second satellite, perform the following steps:

1. Press the Select button on the TV/SAT Switch.
2. The indicator for the current satellite (Sat A or Sat B) extinguishes, while the indicator for the other satellite starts blinking.
3. Once the indicator for the other satellite turns solid green, the TracVision system is tracking the newly selected satellite. You can now use your receiver to choose a channel on the new satellite.

3.2.2 DISH 500 Mode

DISH Network customers will need to configure the TracVision R5/R4 system to use DISH 500 mode, which allows automatic switching between the 119 and 110 satellites, or manually switch satellites using the optional TV/SAT Switch (see *Section 3.2.1, "Using the TV/SAT Switch" on page 3-4*).

Configuring the Antenna for DISH 500 Mode

To configure the TracVision antenna for DISH 500 mode, you will need to run the receiver's Check Switch function twice. You do **not** need a laptop computer.

To configure the TracVision antenna for DISH 500 mode, follow the steps below.

1. Park your vehicle in a blockage-free area and do not move the vehicle until you have completed the entire configuration process.
2. Turn on the master receiver *(the receiver that is connected to the antenna's RF1 connector)* and the television.
3. Turn on the TracVision antenna using the switchplate's power switch.
4. Wait one minute for the antenna to initialize.
5. Using the receiver's remote control, go to the "Point Dish/Signal Strength" screen *(press Menu, 6, 1, 1 on most models)*.

6. Using the remote control's arrow buttons, highlight "Check Switch" then press the Select button.
7. Highlight "Test" then press Select.
8. Wait a minimum of **15 minutes** for the Check Switch function to complete and for the antenna to restart and configure itself for DISH 500 mode.

   If the Check Switch function fails (the receiver locks up), disconnect power from the receiver, restart the antenna, then restore power to the receiver and try the Check Switch function again.
9. Run the Check Switch function a second time. This allows the receiver to configure itself for automatic satellite switching.
10. Wait until the Check Switch function is complete *(it will take a couple minutes)*.
11. Ensure that the TV display matches Figure 3-5:

Figure 3-5 *Check Switch Screen*

Installed Switch: **SW42**				
Input:	**1**	**1**	**2**	**2**
Satellite:	**119**	**119**	**110**	**110**
Polarity:	**Odd**	**Even**	**Odd**	**Even**
Status:	**Satellite reception verified**			

   This indicates that the receiver is configured properly. If this information is not displayed **exactly** as shown above, try running the Check Switch function again.
12. Exit the menu and allow the receiver to download the program guide.
13. Once the program guide has loaded, you can start enjoying satellite TV. The antenna will now switch between satellites automatically as you change channels using the receiver's remote control.

3.3 Watching Television

TracVision R5 is designed to operate whether your vehicle is in motion or parked. TracVision R4 is designed to operate only while your vehicle is parked.

(TracVision R5 only) *Don't forget to turn the system back on before you start driving again. The antenna must be turned on to track the satellite while you are moving.*

Using Your TracVision R5/R4 When Parked

When your vehicle is stopped, it is not necessary for the TracVision R5/R4 to be turned on. After parking your vehicle and confirming that the antenna is receiving the satellite signal, you may turn off the TracVision R5/R4 unit to avoid unnecessary use of power. Because the LNB receives its power from the receiver, the antenna will continue to receive the satellite TV signals and relay them to the receiver.

However, if you plan to change to a channel that is broadcast by another satellite, TracVision R5/R4 must be turned on so the antenna can search for, identify, and lock onto the different satellite.

Cable Unwrap

The antenna unit can rotate a full 720° before coming to the end of its cable. If it does so, the system automatically unwraps the cable by quickly rotating the dish in the opposite direction. During this process, your television transmission will be frozen momentarily while the cable unwraps and the antenna reacquires the satellite.

Unlike turning the power off, the antenna will still be operational and will draw power while in Sleep Mode. If you are going to be parked for an extended period of time, turning off the antenna will conserve power while still allowing you to receive the TV signal.

Sleep Mode *(TracVision R5 only)*

When the vehicle has come to a stop and the antenna holds its position for 1 minute, the antenna unit enters Sleep Mode, which turns off the conical scan tracking, reducing motor noise. When the vehicle moves again, Sleep Mode will automatically turn off and the system will resume tracking. This convenient feature is ideal if the vehicle is parked briefly and passengers want to watch TV.

KVH recognizes that some customers may not want to take advantage of this convenient feature. In this case, it is possible to disable Sleep Mode using a simple software command as follows:

1. Connect a laptop computer to the system using the maintenance port and open the KVH Flash Update Wizard or HyperTerminal, as described in *Section 2.5.1, "Installing Your Selected Satellites" on page 2-16.*
2. Turn on the antenna. When the limit switch test is complete:
   a. Type **HALT** then press Enter.
   b. Type **DEBUGON** then press Enter.
   c. Type **SLEEPOFF** then press Enter.
3. Turn the antenna off by pressing its power button.
4. Wait 30 seconds then press the antenna's power button to turn the antenna back on. Sleep Mode is now disabled. *To reactivate Sleep Mode, follow this same process, typing* **SLEEPON** *instead of SLEEPOFF during Step c.*

Using your TracVision R5 While Moving *(TracVision R5 Only)*

The antenna unit uses conical scanning to maintain peak signal strength to the receiver and to update the satellite's position. When conical scan tracking is active, the antenna moves continually with a circular motion to sweep across the satellite's peak signal. The signal strength is then fed back to the control circuits to keep coming back to the direction of the strongest signal.

4 Troubleshooting

The troubleshooting matrix shown in Table 4-1 identifies some trouble symptoms, their possible causes, and references to troubleshooting solutions.

Table 4-1 *Troubleshooting Matrix*

SYMPTOM / POSSIBLE CAUSE (AND SOLUTION)	Improper wiring (Section 4.1.1)	Insufficient Power (Section 4.1.2)	Incorrect satellite configuration (Section 4.1.3)	Satellite signal blocked (Section 4.1.4)	Dew or rain pooling on dome (Section 4.1.5)	Satellite coverage issue (Section 4.1.6)	Vehicle turning during startup (Section 4.1.7)	Incorrect or loose RF connectors (Section 4.1.8)	Type of multiswitch used (Section 4.1.9)	Stationary use only (Section 4.1.10)	Receiver wiring (Section 4.2.1)	Receiver faulty (Section 4.2.2)	Antenna gyro faulty (Section 4.3)	LNB assembly faulty (Section 4.3)
Antenna non-functional	X	X												
Antenna not switching channels/satellites		X	X					X						
No picture on TV set		X				X		X	X			X		X
Intermittent picture for short intervals		X		X		X	X	X	X		X	X	X	X
System works at rest but not on the move		X		X						X			X	
System will not find satellite		X		X		X	X	X	X			X		X
Snowy television picture		X										X		
Picture jumbled, parts missing, freezing		X			X	X								
TV/SAT Switch Error LED blinking		X						X				X	X	X

If you need technical assistance, please contact KVH Technical Support:

Phone: 1-401-847-3327

E-mail: techs@kvh.com

Internet: www.kvh.com/help

The TracVision R5/R4 antenna contains two fuses located inside the antenna. Only KVH-authorized service technicians should perform repairs. Unauthorized repairs on the antenna unit may void the warranty. Contact KVH Technical Support for details.

Ground loops can also cause the TracVision system to work improperly. To check for a ground loop, disconnect the negative lead from the antenna. If the antenna continues to function, a ground loop is present. KVH recommends installing a 12 VDC 5-amp isolated AC/DC power supply when a ground loop is present.

4.1 Causes and Remedies for Common Operational Issues

There are a number of common issues that can affect the signal reception quality or the operation of the TracVision R5/R4. The following sections address these issues and potential solutions.

4.1.1 Improper Wiring

If the antenna unit is installed but entirely non-responsive, there are two key factors to check as part of the troubleshooting process:

1. Vehicle Power Fuse – Ensure that the vehicle power fuse is installed and intact.
2. Wiring – If the system has been improperly wired, the antenna unit will not operate correctly. Refer to *Section 2.3, "Connecting System Components" on page 2-8* for complete system wiring information.

4.1.2 Insufficient Power

The TracVision system requires an 11-16 VDC power input in order to work properly. If vehicle power fluctuates widely, or is noisy, a 12 VDC 5-amp AC/DC power supply should be installed.

4.1.3 Incorrect Satellite Configuration

The satellite configuration on your receiver must match the satellite setting on the TracVision R5/R4 system.

- Satellite A on the TracVision R5/R4 must be the same satellite as Receiver Alternative 1 (or A, based on your receiver) and must be assigned the Receiver DiSEqC 1 setting.*
- Satellite B on the TracVision R5/R4 must be the same satellite as Receiver Alternative 2 (or B, based on your receiver) and must be assigned the Receiver DiSEqC 2 setting.*

* *The DiSEqC settings only apply to European systems.*

Refer to your receiver's User's Manual for complete instructions on configuring your receiver.

4.1.4 Satellite Signal Blocked

Satellite signals can be blocked or degraded by trees and branches, buildings, mountains, overpasses, or equipment on the vehicle itself. Refer to *Section 2.1, "Choosing the Best Location" on page 2-3* to make certain that the TracVision R5/R4 unit is in the optimal location. Simply moving the vehicle to clear an external obstruction will also restore signal quality.

4.1.5 Dew or Rain Pooling on Dome

Dew or rain can occasionally pool on the top of the radome. While this moisture will usually be dispersed when the vehicle is in motion, it can disrupt the signal while the vehicle is parked. This issue can be minimized with two approaches:

1. Spray the dome with hosed water to remove the dew from the dome surface.
2. Periodically apply liquid dish detergent to the dome surface. Wipe the full-strength detergent on the dome and allow it to dry. This treatment will provide a film that will help shed moisture from the dome.

4.1.6 Satellite Coverage Issue

For your convenience, KVH provides links to several web sites that offer satellite coverage information. Simply go to our web site at www.kvh.com/footprint.

TracVision R5/R4 will provide outstanding reception throughout the entire coverage area for your satellite television service of choice. However, signal quality can be degraded as you approach the fringe coverage areas. Refer to your satellite television service manual to check the viable coverage area.

4.1.7 Vehicle Turning During Startup *(TracVision R5 only)*

If the vehicle turns during the 60-second startup and initialization sequence that occurs immediately after turning on the power to the TracVision R5 unit, the antenna gyro will record that variable motion as "standing still." This may cause the antenna to track improperly. To solve this problem, turn TracVision R5 off for at least 10 seconds. Turn the system back on, making certain that the vehicle is either motionless or traveling in a straight line for the 60 seconds immediately following power-up.

4.1.8 Incorrect or Loose RF Connectors

As part of preventive maintenance (as described in *Section 5, "Maintenance" on page 5-1*), KVH recommends checking the antenna unit cable connections. A loose RF connector can reduce signal quality. In addition, if you are unable to switch to the other programmed satellite, make sure that you have connected your RF signal cable to the antenna baseplate connector labeled "RF1" (see *Section 2.3.5, "Connecting the Antenna RF Signal Cable to the Receiver" on page 2-12*).

4.1.9 Type of Multiswitch Used *(North American Systems Only)*

An active multiswitch must always be used to connect the TracVision R5/R4 system to more than two receivers. Refer to *Section 2.3.5.2, "Connecting Three or More Receivers" on page 2-13* for directions on proper multiswitch/multiple receiver cabling.

KVH offers an upgrade kit (KVH Part #02-1026) that adds in-motion tracking capability to the TracVision R4, allowing you to receive satellite signals while on the move.

4.1.10 Stationary Use Only *(TracVision R4 only)*

The TracVision R4 antenna was designed for stationary use only. As such, the antenna will track the desired satellite while your vehicle is parked, but not while the vehicle is in motion.

4.2 Receiver Troubleshooting

The receiver that was provided with your satellite television service may also be the cause of less-than-ideal operation.

4.2.1 Receiver Wiring

Refer to *Section 2.3.5, "Connecting the Antenna RF Signal Cable to the Receiver," on page 2-12*, and your receiver's User's Manual to confirm that the receiver is properly connected to the antenna unit and the television.

4.2.2 Receiver Faulty

In the case of a faulty receiver, refer to your receiver's User's Manual for service, replacement, and warranty information.

4.3 Antenna Faults

Only KVH-authorized service technicians should perform repairs on the TracVision antenna. Unauthorized repairs on the antenna unit may void the warranty. Contact KVH Technical Support for details.

4.4 Computer Diagnostics

TracVision R5/R4 has been designed to provide diagnostic readouts on a PC with a RS-232 serial communication port. If you are unable to isolate a system problem with the foregoing troubleshooting tools, set up a laptop to carry out computer diagnostics as described below. System problems might be found somewhere through the diagnostic readouts.

The Flash Update Wizard is available to KVH-authorized dealers through the KVH Partner Portal.

This procedure requires a PC with Windows HyperTerminal or KVH Flash Update Wizard installed.

1. Connect one end of the PC data cable to the maintenance port on the switchplate (see Figure 4-1). Connect the other end to the serial port on your PC (a 9-pin/25-pin connector adapter may be needed for some PCs).

Figure 4-1 *Switchplate Maintenance Port*

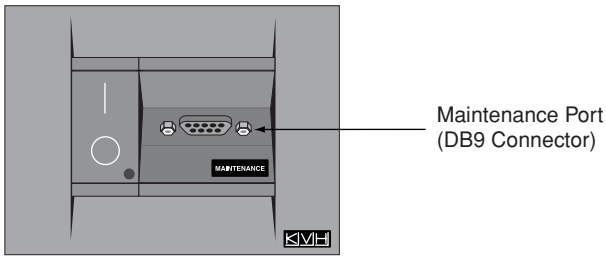

2. If you are using **HyperTerminal**, open it and establish the following settings:
   - Bits per second: 9600
   - Data bits: 8
   - Parity: None
   - Stop bits: 1
   - Flow control: None

   If you are using the **KVH Flash Update Wizard,** double-click the "KVH Flash Update Wizard" shortcut on your computer's desktop to start the wizard. *You do not need to flash the antenna to view diagnostic readouts; you will simply view the data in the "TracVision Antenna Comms" window.*

3. Apply power to the TracVision R5/R4 system and allow the system to complete full initialization. Observe the data scrolling on the PC display to identify any system problems detected. If no data is seen, recheck your connections and setup.

5 Maintenance

5.1 Warranty/Service Information

For information on KVH warranty, repair, and liability policies, please refer to the complete warranty statement provided with your KVH product. If you have any questions, please call your local authorized dealer/installer or distributor, or contact KVH or KVH Europe directly.

5.2 Preventive Maintenance

TracVision R5/R4 requires minimal preventive maintenance. The following tasks are sufficient to maintain peak performance.

Monthly

- Wash the exterior of the radome and baseplate assembly with fresh water; a mild detergent may be added to remove grime. Do not spray the radome directly with high-pressure water.
- Do not apply abrasive cleaners or volatile solvents such as acetone to the ABS radome.

Annually

- Remove the radome and examine the interior of the antenna unit for signs of corrosion, loose connections, or frayed or broken wires.
- Visually inspect the elevation drive shaft to be certain that it moves easily and is clear of grit and debris.

*If a need arises to paint the radome, **ONLY use non-metallic automotive paint** to avoid degrading the RF signal strength and the reception quality.*

When cleaning the radome, avoid any compounds that react with plastic.

The serial number of your TracVision R5/R4 will be required during any troubleshooting or service calls. You will find the serial number at the front of this manual.

To help us continually improve the quality and reliability of our systems, please return any failed component to KVH or KVH Europe (care of the mailing address listed at the front of this manual) after you receive your replacement part.

5.3 Replaceable Parts

TracVision R5/R4 has been designed with durability and low maintenance in mind. If you experience an operating problem or otherwise require technical assistance, contact your local authorized TracVision R5/R4 dealer/distributor first. Have the antenna unit serial number ready, along with a list of the trouble symptoms. If an authorized dealer/distributor is not located nearby, contact the factory directly at the telephone, fax, or e-mail listings inside the front cover.

Replacement part numbers for units that can be serviced in the field are listed in Table 5-1. These parts can be replaced by any KVH-authorized dealer/distributor.

Table 5-1 *Field Replaceable Units*

Part Name	Part Number
Baseplate Assembly *(TracVision R5)*	02-1498-01* 02-1498-03**
Baseplate Assembly *(TracVision R4)*	02-1498-02* 02-1498-04**
Radome Assembly *(TracVision R5)*	02-0953-12†
Radome Assembly *(TracVision R4)*	02-0953-11†
Data/Power Cable	32-0730-28
RF Cable	32-0417-28
PC Cable	32-0628-06
CPU PCB	02-1043-02
RF PCB	02-1342
Antenna Gyro *(TracVision R5 only)*	02-1433
Antenna Gyro Gasket *(TracVision R5 only)*	24-0139
System Fuses	16-0017-3150
LNB (European System)	19-0346
LNB (N. American System)	19-0056
Switchplate	02-1023-01
TV/SAT Switch *(optional)*	01-0245

* Baseplate assembly with single-output LNB (European systems)
** Baseplate assembly with dual-output LNB (North American systems)
† Specify color when ordering

5.4 Reshipping the Antenna

If you need to repack the antenna unit for shipment, the shipping restraints removed during installation must be reinstalled. Follow these steps to reinstall the restraints.

1. Remove the radome.
2. Rotate the antenna unit so that the LNB is facing away from the baseplate connectors.
3. Attach the three restraints to the baseplate using the ¼"-20 x ⅝" hex screws and washers (provided in the kitpack) and nuts (removed from the restraints during installation) as pictured in Figure 5-1.

When rotating the azimuth mechanism by hand, go slowly! Hitting the mechanical stops with excessive force will damage the azimuth limit switch.

Figure 5-1 *Attaching the Shipping Restraints to the Antenna Baseplate*

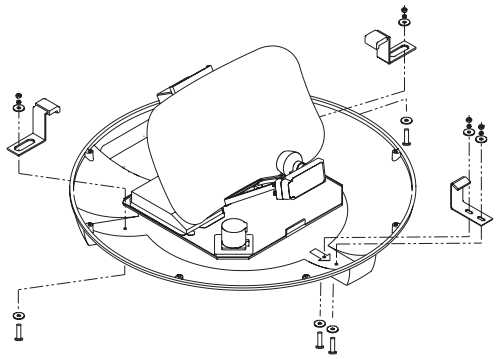

4. Place the antenna bracket on the forward shipping restraint.

5. Secure the forward restraint and bracket by wrapping two tie-wraps around the bend in the forward restraint and the antenna bracket (at the end of the LNB bracket) as illustrated in Figure 5-2.

IMPORTANT! Before returning the antenna, be sure to obtain an RMA number from KVH's Technical Support Department and write the number on the outside of the box. Shipments received without an RMA number will be returned to you at your expense.

Figure 5-2 *Securing the Forward Shipping Restraint*

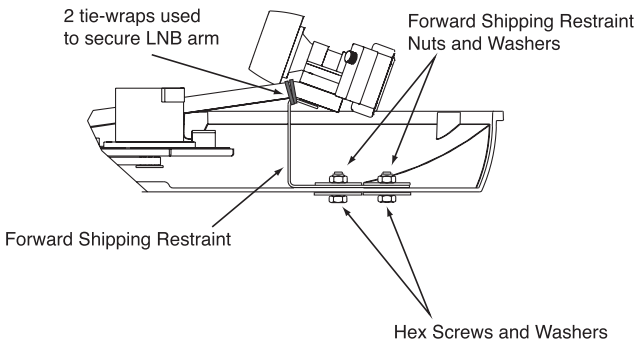

KVH is not liable for damage caused by improper shipping.

6. Replace the radome.
7. Place the entire antenna unit into its shipping box using the original packaging material. Secure the box to a pallet to ensure upright transport to KVH.

Appendix A
System Specifications

Table A-1 *TracVision R5/R4 System Specifications*

Physical Characteristics

Power	11-16 volts DC @ 2.5 amps nominal, 3.5 amps peak
Dimensions/Weight	32" (81 cm) wide x 14.8" (38 cm) high, 33 lbs (15 kg)
LNB	European system: Single output N. American system: Dual output
Tracking *(TracVision R5 only)*	Better than 30°/sec
Maintenance Port	9600 bps, 8,N,1,EIA, RS232

Pointing System

Elevation Range	15° to 75°
Azimuth Range	720°
Position Repeatability	0.1°

Environmental

Operating Temperature	-25°C to +55°C (-13°F to +131°F)
Storage Temperature	-40°C to +85°C (-40°F to +185°F)
Humidity	to 100 percent

Appendix B
Switchplate Template

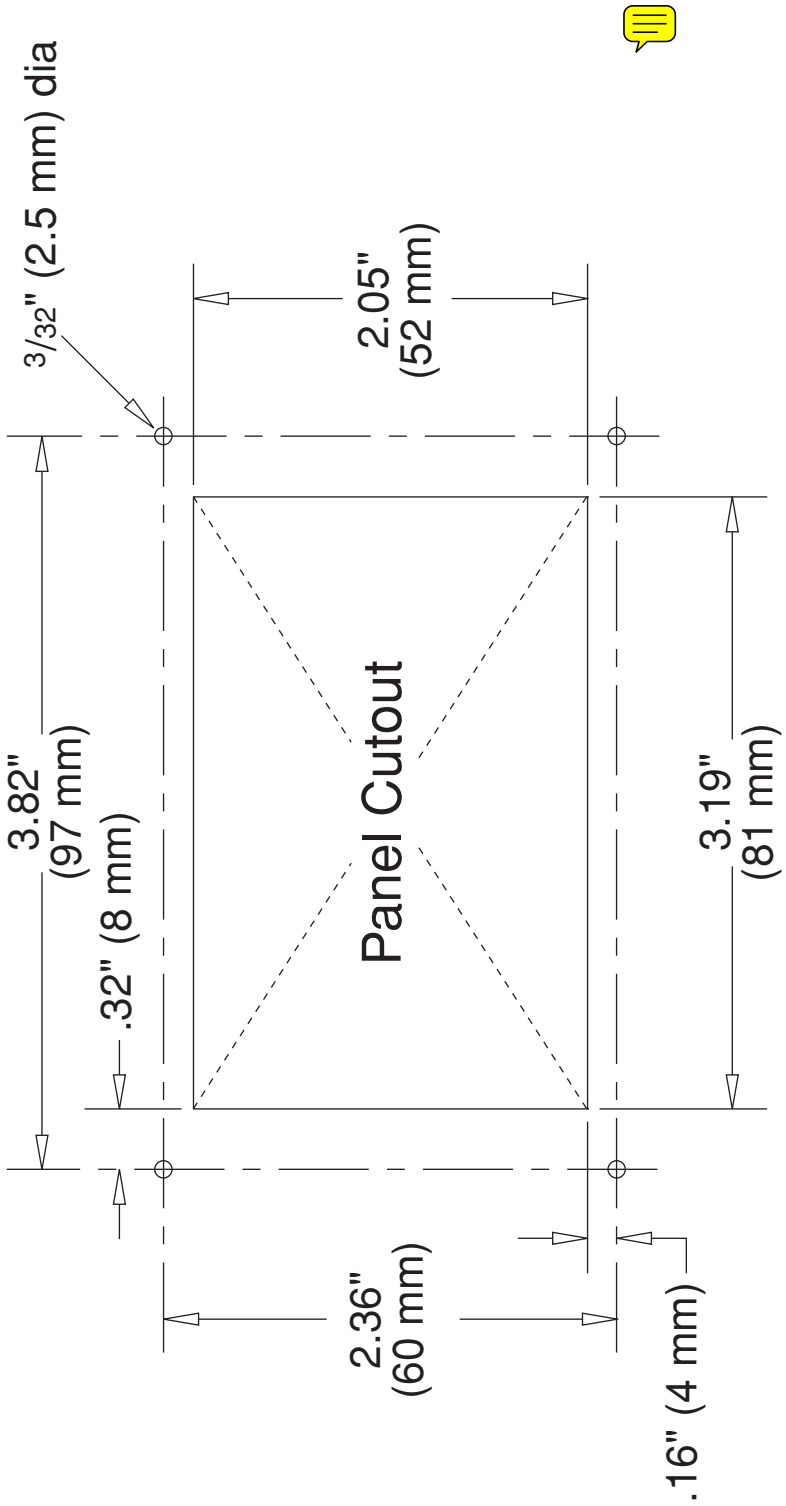

TVR5/R4OM_Cover11.05

KVH Industries, Inc.
50 Enterprise Center Middletown, RI 02842 U.S.A.
Phone: +1 401 847-3327 Fax: +1 401 849-0045
E-mail: info@kvh.com Internet: www.kvh.com

KVH Europe A/S
Kokkedal Industripark 2B 2980 Kokkedal Denmark
Phone: +45 45 160 180 Fax: +45 45 160 181
E-mail: info@kvh.dk Internet: www.kvh.com

KVH® and TracVision® are registered trademarks of KVH Industries, Inc.