TracVision TV1/RV1 LNB
Replacement Instructions

Technical Support

If you need technical assistance, please contact KVH Technical Support:

North/South America, Australasia:
Phone: +1 401 847-3327
E-mail: support@kvh.com

Europe, Middle East, Asia-Pacific, Africa:
Phone: +45 45 160 180
E-mail: support@emea.kvh.com

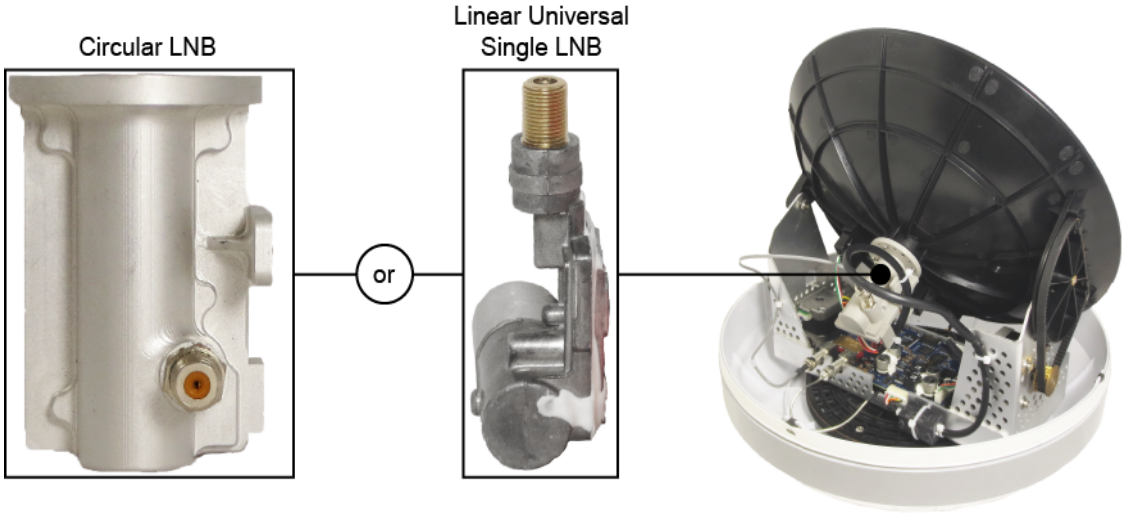

The following instructions explain how to modify your TracVision® TV1/RV1 antenna to use a different LNB or replace a defective LNB.

Tools Required

This procedure requires the following tools:

- #2 Phillips torque screwdriver set to 15 in.-lbs
- Torque wrench and 2 mm Allen hex key
- Wire cutters
- 7/16" torque wrench set to 15 in.-lbs
- Laptop computer with the latest software downloaded via the KVH Partner Portal, or an Apple® iOS or Android™ smartphone/tablet with the latest software downloaded via the TracVision TV/RV mobile app

Initial Steps

Follow the steps below to begin the procedure by removing the radome to access the LNB.

1. Power off and unplug the TV-Hub to disconnect power from the antenna (see Figure 1).

CAUTION

Make sure the antenna is pointed away from the sun whenever the radome is removed. The high-gloss reflector can focus sunlight into a narrow beam, generating a significant amount of heat that can cause damage and injury.

2. Remove and discard the four #8-32 screws securing the radome to the baseplate (see Figure 2). Carefully lift the radome straight up until clear of the antenna assembly and set it aside in a safe place. If you keep the radome topside, secure it with a lanyard to prevent it from falling overboard. Do not place the radome on a hot steel deck – the heat may warp the radome.

3. Follow the steps on the associated page below for your LNB replacement or conversion:

LNB	Page
Replacing a Linear Universal Single LNB	3
Replacing a Circular LNB	5
Converting From a Circular LNB To a Linear Universal Single LNB	7
Converting From a Linear Universal Single LNB To a Circular LNB	10

Figure 1: Powering On the TV-Hub

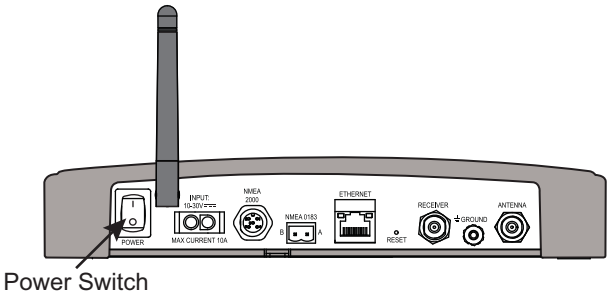

Figure 2: Radome Screws

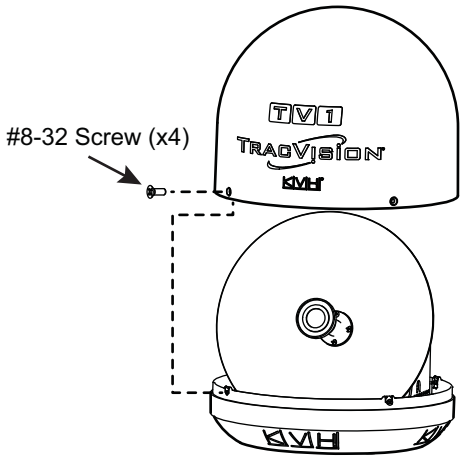

Replacing a Linear Universal Single LNB

Follow the steps below to replace a linear universal single LNB.

Removing the Old LNB

1. Note the skew angle of the LNB (see Figure 3). **If you will install a linear LNB in its place**, you will need to set the new LNB to this skew angle.
2. Cut and remove the tie-wrap securing the gyro cable to the LNB (see Figure 4).
3. Disconnect the RF cable from the LNB.
4. Using a 2 mm Allen hex key, loosen the two M4 set screws securing the LNB into the choke feed (see Figure 3).
5. Remove the LNB from the choke feed.

Installing the New LNB

6. Insert the new LNB fully into the choke feed.
7. Rotate the LNB as necessary to set the LNB to the skew setting you noted during removal (see Figure 3). **If you are replacing a circular LNB**, you will access the Setup Wizard later to obtain the correct skew angle for your new LNB.
8. Tighten the choke feed set screws with a 2 mm Allen hex key to approximately 11 in.-lbs of torque.
9. Connect the RF cable to the LNB, routing the cable as shown in Figure 4. Then tighten to 15 in.-lbs of torque.

Important!

Maintain a minimum bend radius of 1/2" (1.3 cm) when routing the RF cable to the LNB. Sharp bends or kinks in the cable can degrade antenna performance.

10. Using a tie-wrap *(supplied in kit)*, secure the gyro cable to the LNB (see Figure 4). Be sure to trim the excess portion of the tie-wrap you installed and collect the trimming from the antenna to avoid damage when the unit rotates.

Figure 3: Skew Setting

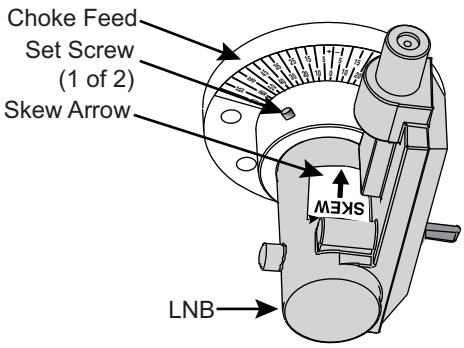

Figure 4: RF Cable Routing (Linear Single LNB)

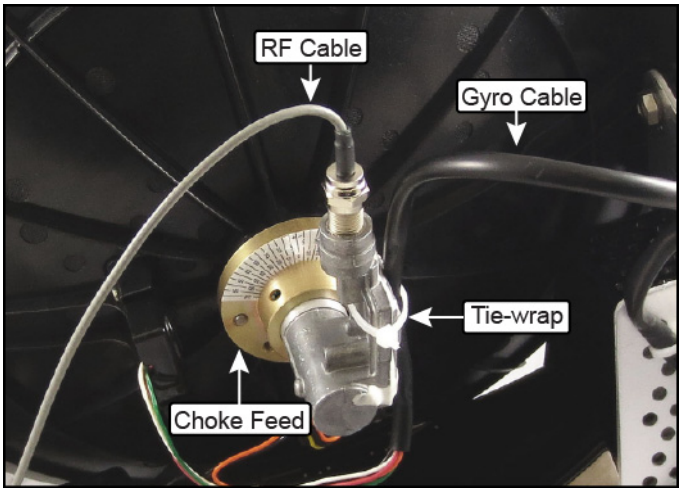

11. Slowly rotate the antenna assembly through its elevation range to ensure neither the gyro cable nor the RF cable restrict the antenna's movement.

12. Inspect the inside of the antenna to make sure you have not left any tools or debris inside.

13. Reinstall the radome onto the antenna, securing it with four new #8-32 screws (*supplied in kit*).

Reconnecting Power to the System

14. Reconnect power to the TV-Hub (see Figure 5).

15. Test the system for normal operation. If there is a problem, contact KVH Technical Support.

    The procedure is complete!

Figure 5: Powering On the TV-Hub

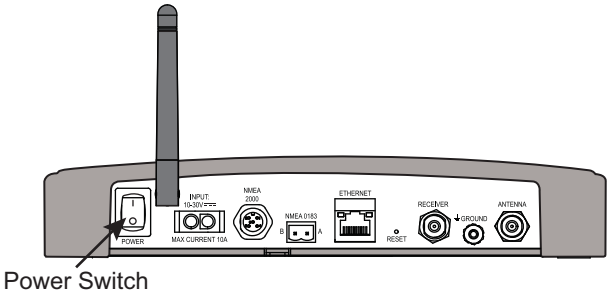

Replacing a Circular LNB

Follow the steps below to replace a circular LNB.

Removing the Old LNB

1. Cut and remove the tie-wraps (labeled 1 and 2 in Figure 6) securing the gyro cable to the currently installed LNB.
2. Disconnect the RF cable from the LNB.
3. Remove and discard the four #8-32 screws securing the LNB and feed tube to the reflector (see Figure 7). Carefully remove the LNB, feed tube, and wavy washer (see Figure 8). Set them aside in a safe place.

Installing the New LNB

4. Center the wavy washer underneath the feed tube so that it does not interfere with the screws (see Figure 8). Then secure the LNB and the feed tube to the reflector using four new #8-32 screws (*supplied in kit*) and tighten to 15 in.-lbs of torque (see Figure 7).
5. Connect the RF cable to the LNB, routing the cable as shown in Figure 6. Then tighten to 15 in.-lbs of torque.

Important!

Maintain a minimum bend radius of 1/2" (1.3 cm) when routing the RF cable to the LNB. Sharp bends or kinks in the cable can degrade antenna performance.

6. Using two tie-wraps (*supplied in kit*), secure the gyro cable to the LNB (see Figure 6). Be sure to trim the excess portion of the tie-wraps you installed and collect the tie-wrap trimmings from the antenna to avoid damage when the unit rotates.

Figure 6: RF Cable Routing (Circular LNB)

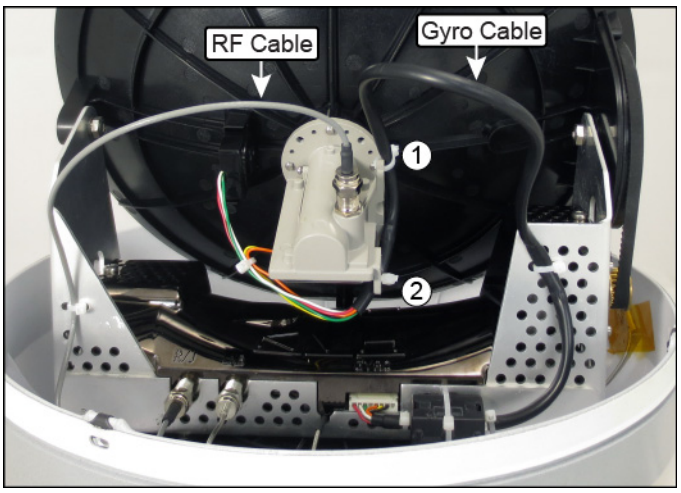

Figure 7: #8-32 Screws

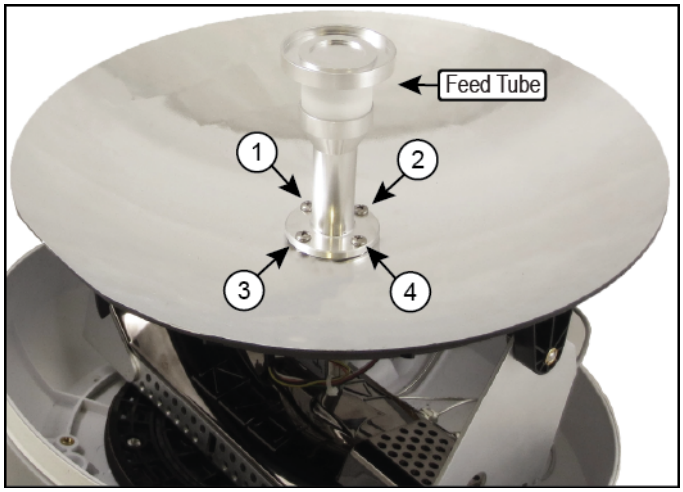

Figure 8: Wavy Washer and Feed Tube

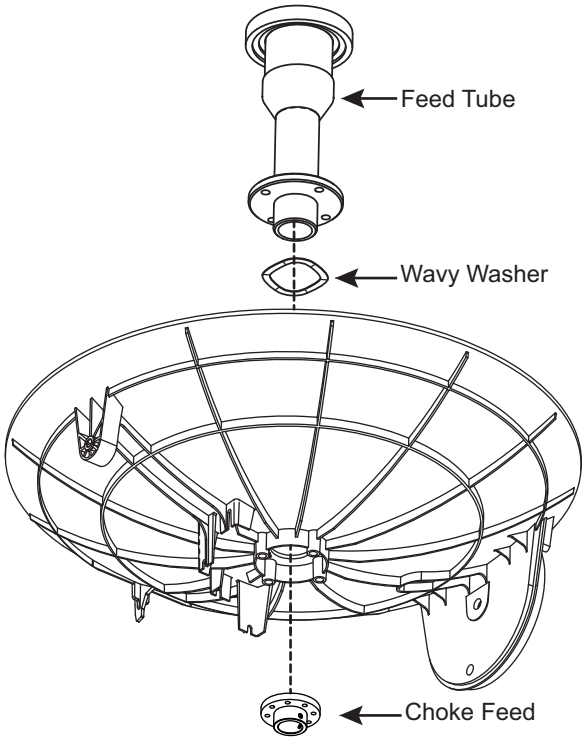

7. Slowly rotate the antenna assembly through its elevation range to ensure neither the gyro cable nor the RF cable restrict the antenna's movement.

8. Inspect the inside of the antenna to make sure you have not left any tools or debris inside.

9. Reinstall the radome onto the antenna, securing it with four new #8-32 screws (*supplied in kit*).

Reconnecting Power to the System

10. Reconnect power to the TV-Hub (see Figure 9).

11. Test the system for normal operation. If there is a problem, contact KVH Technical Support.

    The procedure is complete!

Figure 9: Powering On the TV-Hub

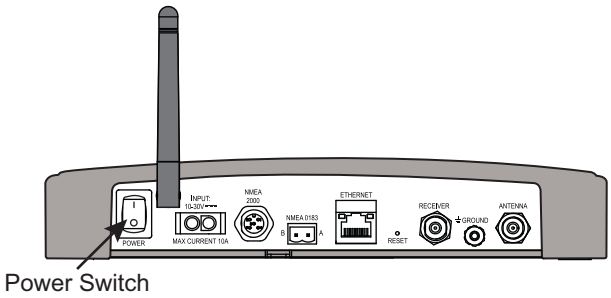

Converting From a Circular LNB To a Linear Universal Single LNB

Follow the steps below to convert from a circular LNB to a linear universal single LNB.

Removing the Old LNB

1. Remove the old LNB by following steps 1-3 on page 5.
2. Realign the wavy washer underneath the feed tube so that it does not interfere with the screws (see Figure 10). Then secure the choke feed (*supplied in kit*) and the feed tube to the reflector using four new #8-32 screws (*supplied in kit*) and tighten to 15 in.-lbs of torque (see Figure 11).

Important!

Be sure to orient the choke feed so that the zero (0) mark on its skew angle label is centered at the top.

Installing the New LNB

3. Install the new LNB by following steps 6-12 on page 3.

Reconnecting Power to the System

4. Reconnect power to the TV-Hub (see Figure 12).

CAUTION

Prevent access to the antenna if you leave it unattended to continue the installation belowdecks. The antennas moving parts can cause injury.

Make sure the antenna is pointed away from the sun whenever the radome is removed. The high-gloss reflector can focus sunlight into a narrow beam, generating a significant amount of heat that can cause damage and injury.

Figure 10: Wavy Washer and Feed Tube

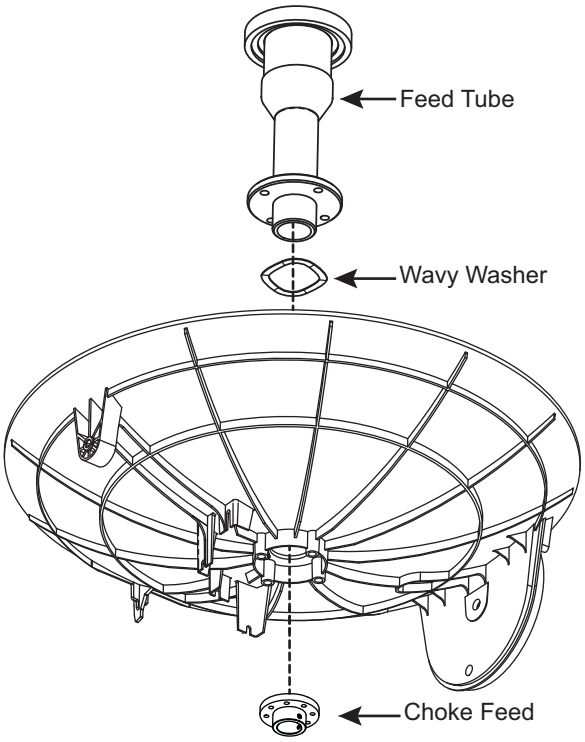

Figure 11: #8-32 Screws

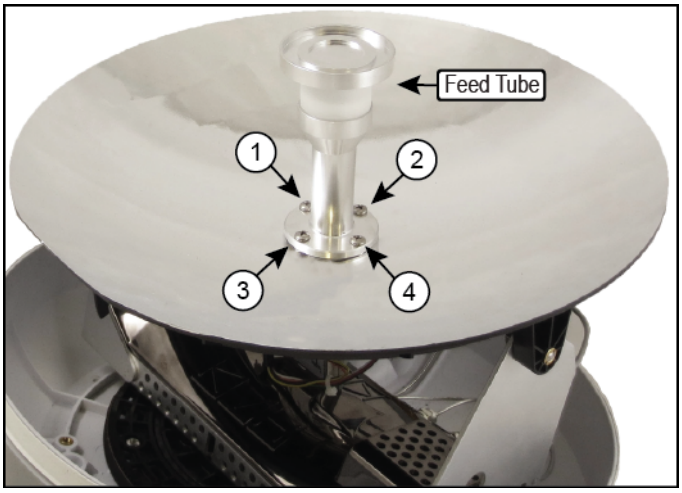

Figure 12: Powering On the TV-Hub

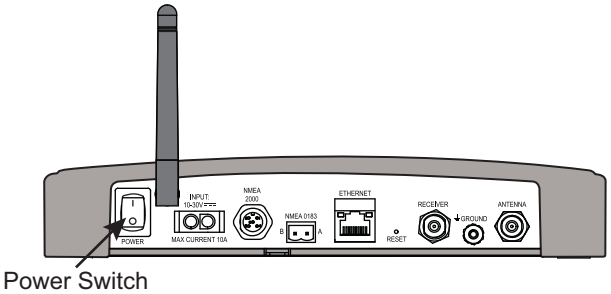

5. Connect your computer to the TV-Hub and access its web interface. (Refer to the TracVision system's Quick Start Guide for details.)
6. Follow the instructions in the TracVision TV1/RV1 Help to update the system software to the latest version.
7. At the Support page of the web interface, select Command Line (see Figure 13).

Important!

Commands entered into the command line must be typed exactly as they are printed below, including any spaces shown. Incorrectly typed commands could result in a critical error.

8. At the command line, enter and send the following commands:
   - **HALT**
   - **DEBUGON**
   - **EEUNLOCK**
   - **ANTLNB,19-0444 Linear U,L,13/18V,10600,N,ON,9750,N,OFF**
9. After installation is complete and the TV-Hub confirms the new LNB has been loaded, enter and send the following command:
   - **ZAP**

Figure 13: Command Line

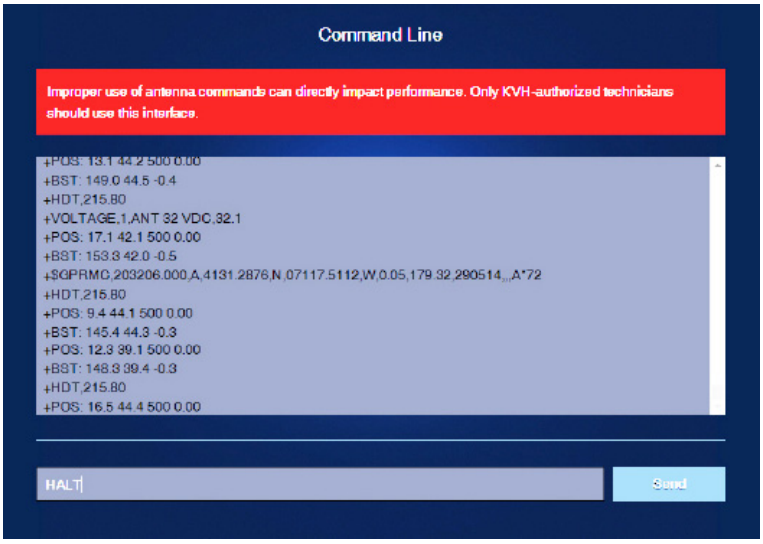

Setting the Skew Angle

10. Reconnect to the TV-Hub web interface.

11. Select **Settings** and then select **Setup Wizard**.

12. Select **Proceed with Setup Wizard** on the Setup Wizard home page (see Figure 14).

13. From within the Setup Wizard, select satellite(s) to track.

14. Select a configuration and write down the proper skew angle.

15. Power off and unplug the TV-Hub to disconnect power from the antenna.

16. Loosen the set screws, then rotate the LNB as necessary to set the LNB to the skew setting you noted earlier (Figure 15). Tighten the set screws with a 2 mm Allen hex key to approximately 11 in.-lbs of torque.

17. Slowly rotate the antenna assembly through its elevation range a second time to ensure the skew angle does not effect the rotation. Adjust the cable routing as necessary.

18. Reinstall the radome onto the antenna, securing it with four new #8-32 screws (*supplied in kit*).

19. **If you are converting to a circular LNB for DIRECTV service**, disconnect your TV-Hub B and rewire the system to your new TV-Hub A. Refer to the TracVision TV1/RV1 Installation Guide(s) for details (*supplied in kit*).

20. Reconnect power to the TV-Hub.

Verifying Normal Operation

21. Test the system for normal operation. If there is a problem, contact KVH Technical Support.

The procedure is complete!

Figure 14: Setup Wizard

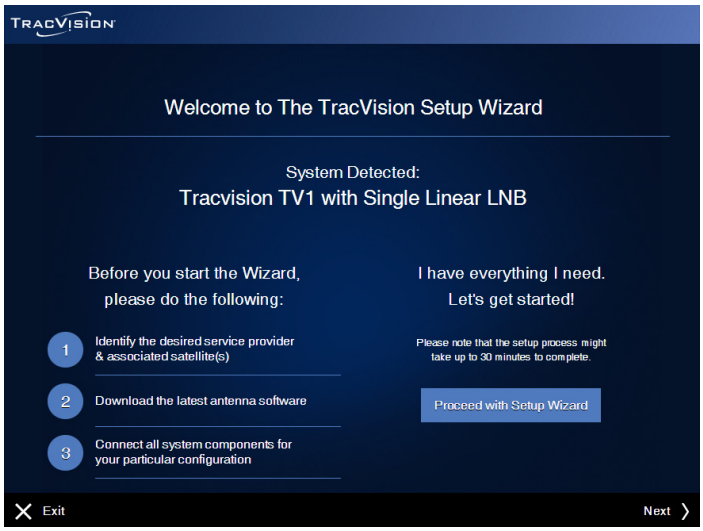

Figure 15: LNB Skew Setting

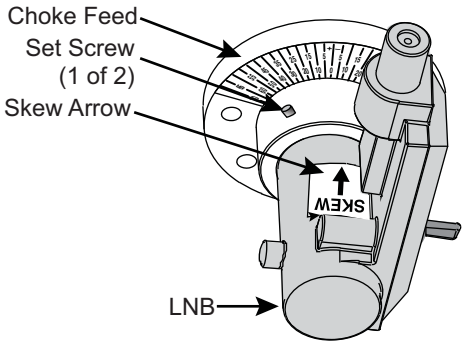

Converting From a Linear Universal Single LNB To a Circular LNB

Follow the steps below to convert from a linear universal single LNB to a circular LNB.

Removing the Old LNB

1. Detach cables from the old LNB by following steps 2-3 on page 3.
2. Remove and discard the four #8-32 screws securing the choke feed, LNB, and feed tube to the reflector (see Figure 16 and Figure 17). Store the choke feed and the old LNB in a safe place for future use. Then carefully remove the feed tube and wavy washer (see Figure 17).

Installing the New LNB

3. Install the new LNB by following steps 4-9 on page 5.

Reconnecting Power to the System

4. Reconnect power to the TV-Hub (see Figure 18).

Figure 16: #8-32 Screws

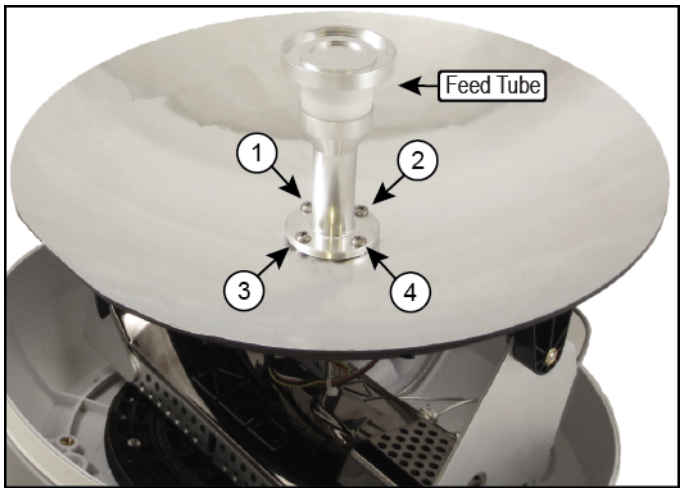

Figure 17: Wavy Washer and Feed Tube

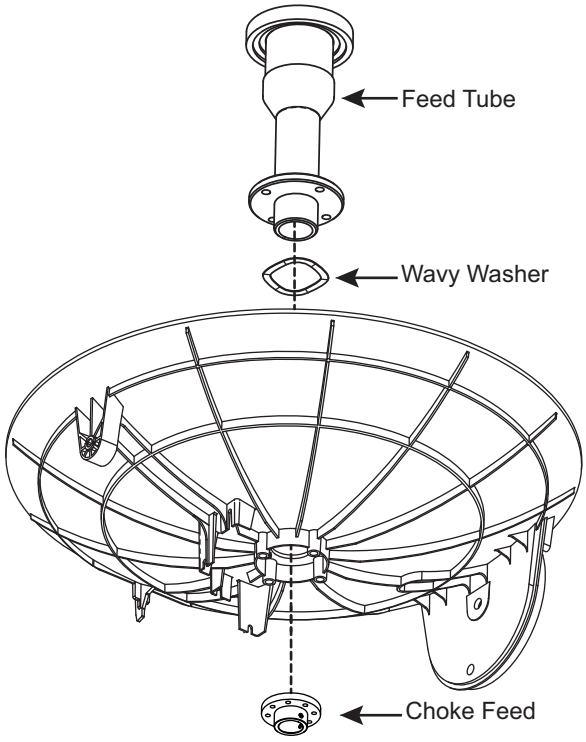

Figure 18: Powering On the TV-Hub

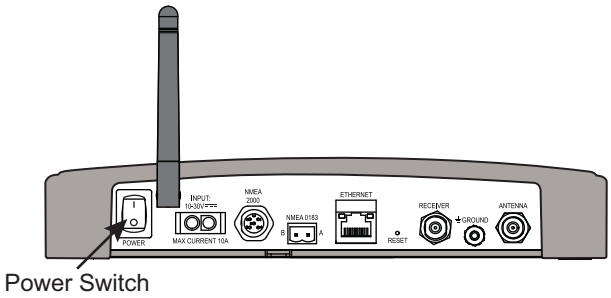

Registering the New LNB

5. Connect your computer to the TV-Hub and access its web interface. (Refer to the TracVision system's Quick Start Guide for details.)

6. Follow the instructions in the TracVision TV1/RV1 Help to update the system software to the latest version.

7. At the Support page of the web interface, select Command Line (see Figure 19).

Important!

Commands entered into the command line must be typed exactly as they are printed below, including any spaces shown. Incorrectly typed commands could result in a critical error.

8. At the command line, enter and send the following commands:

   - **HALT**
   - **DEBUGON**
   - **EEUNLOCK**
   - **ANTLNB,19-0815 CIRCULAR,C,18V,11250,N,OFF,14350,I,OFF**

9. After installation is complete and the TV-Hub confirms the new LNB has been loaded, enter and send the following command:

   - **ZAP**

10. Reconnect to the TV-Hub web interface and run the **Setup Wizard** to select satellites and services.

Verifying Normal Operation

11. Test the system for normal operation. If there is a problem, contact KVH Technical Support.

    The procedure is complete!

Figure 19: Command Line